SERVICE MANUAL SD142/SD242

marantz®

model SD142/SD242

Stereo Cassette Deck

MARANTZ DESIGN AND SERVICE

Using superior design and selected high grade components, MARANTZ company has created the ultimate in stereo sound. Only **original MARANTZ parts** can insure that your MARANTZ product will continue to perform to the specifications for which it is famous.

Parts for your MARANTZ equipment are generally available to our National Marantz Subsidiary or Agent.

ORDERING PARTS:

Parts can be ordered either by mail or by telex. In both cases, MARANTZ part number has to be specified. If you order by mail, fulfil MARANTZ order forms.

MARANTZ S.A.
EUROPEAN PARTS DEPARTMENT
2, Avenue Léopold III
B-7120 PERONNES-lez-BINCHE
BELGIUM
TWX: 57589 SEPLT B

MARANTZ NATIONAL PARTS DEPARTMENT
20525 Nordhoff Street
Chatsworth, California 91311
Phone: 1-800-423-5108
Phone: 1-818-998-9333

The following information must be supplied to eliminate delays in processing your order:

1. Complete address
2. Complete part numbers and quantities required
3. Description of parts
4. Model number for which part is required
5. Way of shipment
6. Signature: any order form or telex must be signed otherwise such part order will be considered as null and void.

PARTS ORDERING:

Parts may be ordered from the following addresses:

EUROPE

MARANTZ S.A.
European Parts Department
2, Avenue Léopold III
B-7120 Péronnes-lez-Binche
Belgium
Telex: 57589

MARANTZ DENMARK
Bregnerødvej 132b
3460 Birkerød
Denmark
Telex: 39137

MARANTZ BELGIUM
45 Rue Auguste Van Zande
1080 Brussels
Belgium

MARANTZ NEDERLAND B.V.
Wagenmakersweg 3
3449 HV Woerden
Netherlands

MARANTZ AUSTRIA Ge.M.B.H.
25 Franz Lisztgasse
2380 Perchtoldsdorf
Austria
Telex: 113583

MARANTZ S.A.
326 Avenue Louise Bte 32
1050 Bruxelles
Belgium
Telex: 26602

MARANTZ FRANCE
4 Rue Bernard Palissy
92600 Asnières
France
Telex: 611651

MARANTZ SVENSKA A.B.
Svartviksvägen 56
Träneberg Bromma
Sweden
Telex: 13449

MARANTZ ITALIANA S.p.A.
Via Monte Napoleone, 10
20121 Milano
Italia

MARANTZ GERMANY G.M.B.H.
Max-Planckstrasse 22
6072 Dreieich 1
Germany
Telex: 4185316

MARANTZ AUDIO U.K. LTD.
Unit 15/16
Saxon Way Industrial Estate
Moor Lane
Harmondsworth UB7 OLW
Great Britain
Telex: 935196

AUSTRALIA

MARANTZ AUSTRALIA PTY., LTD.
19 Chard Road
Brookvale, NSW 2100
Australia
Telex: 24121

U.S.A.

MARANTZ COMPANY, INC.
National Service Dept.
P.O. Box 577
Chatsworth, CA 91311
U.S.A.
Telex: 4720284

JAPAN

MARANTZ JAPAN, INC.
35-1, 7-chome, Sagamiono
Sagamihara-shi, Kanagawa
Japan
Telex: 22878

All of the above locations are fully equipped to take care of your total service needs. Because various countries have differing configuration requirements, it is necessary that you contact the service facility in your particular country. In the event that there is no service location listed for your country, please, contact the nearest facility for the necessary assistance.

In case of difficulties, do not hesitate to contact the Technical Department at abovementioned address.

NOTE—FOR U.S.A. ONLY

Parts for your MARANTZ stereo are generally available within 72 hours throughout the nation via a toll-free line to our National Parts Depot in California. The sales professionals who take your call immediately refer to their own desk top computer terminal and can quickly determine the availability and price information you require. If, for some reason, your order should exceed our available stock, we usually can instantly provide an alternate replacement part or current delivery information. When the order is placed and confirmed, the computer simultaneously generates "hard copy" orders at the distribution center. As hard copies come directly from the computer to the national parts depot, your requested stock is assembled and prepared for shipment and placed on the first available carrier for delivery to you.

Phone orders will eliminate mail delays, and we encourage the use of this method. If you order by mail, use MARANTZ parts order forms which are available from MARANTZ NATIONAL PARTS DEPARTMENT.

marantz®

TABLE OF CONTENTS

SECTION PAGE

INTRODUCTION 1

1. SHOCK, FIRE HAZARD SERVICE TEST: 1

2. TEST EQUIPMENT REQUIRED FOR SERVICING 2

3. P.W. BOARDS 2

4. ELECTRICAL ADJUSTMENTS 2
   - 4.1 Precautions for Adjustment and Measurement 2
   - 4.2 Head Azimuth Adjustment 2
   - 4.3 Tape Speed Adjustment 3
   - 4.4 Playback Equalizer Measurement 3
   - 4.5 Playback Output Adjustment 3
   - 4.6 Peak Level Meter Measurement 3
   - 4.7 MPX Filter Adjustment 4
   - 4.8 Record-Playback Level Adjustment 4
   - 4.9 Recording/Playback Frequency Response Adjustment (SD242 Only) 5
   - 4.10 Recording/Playback Frequency Response Adjustment (SD142 Only) 5

5. DISASSEMBLY 6
   - 5.1 Removing the Top Cover 6
   - 5.2 Removing the Front Panel 6
   - 5.3 Removing the Mechanism 6
   - 5.4 Removing the Main P.W. Board 6

6. BLOCK/LEVEL DIAGRAMS 7

7. WIRING DIAGRAMS 8

8. EXPLODED VIEW AND PARTS LIST 10

9. ELECTRICAL PARTS LIST 17

10. TECHNICAL SPECIFICATIONS 24

11. SCHEMATIC DIAGRAM 26

MARANTZ MODEL SD142/SD242 STEREO CASSETTE DECK

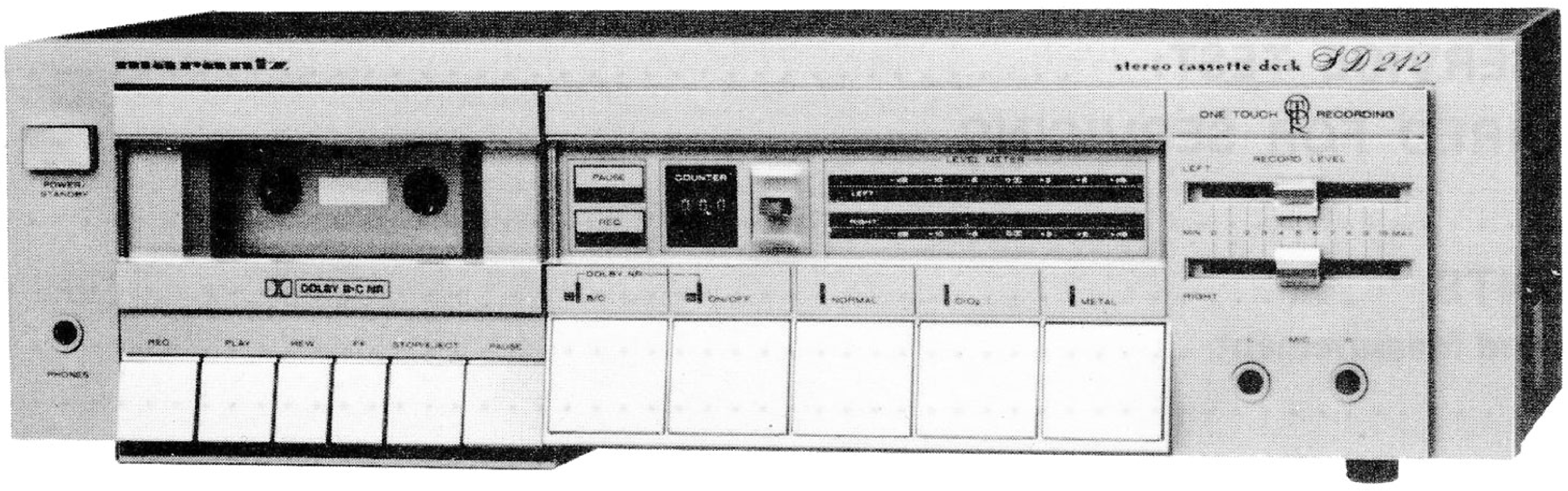
marantz
stereo cassette deck SD242
ONE TOUCH RECORDING
RECORD LEVEL
LEFT
RIGHT
POWER/STANDBY
PHONES
PAUSE
REC
COUNTER
LEVEL METER
DOLBY B-C NR
DOLBY NR
B/C
ON/OFF
NORMAL
CrO₂
METAL
REC
PLAY
REW
FF
STOP/EJECT
PAUSE
MIC

SD242

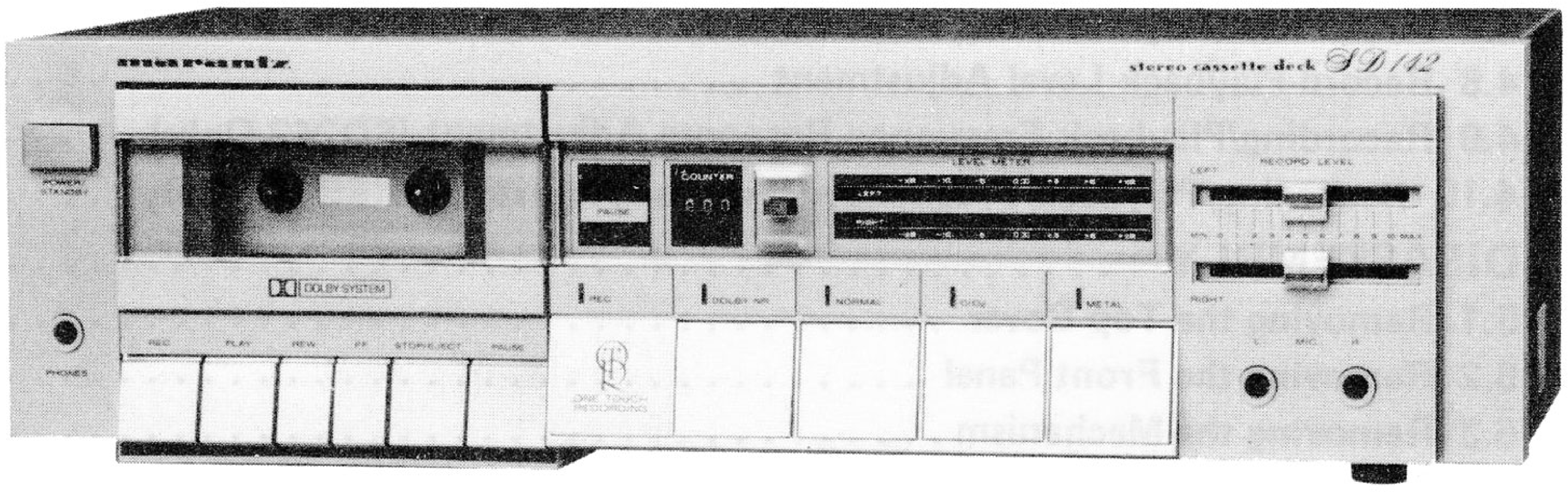
marantz
stereo cassette deck SD142
RECORD LEVEL
LEFT
RIGHT
POWER/STANDBY
PHONES
PAUSE
COUNTER
LEVEL METER
DOLBY SYSTEM
REC
DOLBY NR
NORMAL
CrO₂
METAL
ONE TOUCH RECORDING
REC
PLAY
REW
FF
STOP/EJECT
PAUSE
MIC

SD142

INTRODUCTION

This service manual are prepared for use by Authorized Warranty Station and contains service information for Marantz Model SD142/SD242 Stereo Cassette Deck.

Servicing information and voltage data included in this manual are intended for use by the knowledgeable and experienced technician only All instructions should be read carefully. No attempt should be made to proceed without a good understanding of the operation of the Cassette Deck.

The parts list furnishes information by which replacement parts may be ordered from the Marantz Company. A simple description is included for parts which can be usually obtained through local suppliers.

1. SHOCK, FIRE HAZARD SERVICE TEST:

CAUTION: After servicing this appliance and prior to returning to customer, measure the resistance between either primary AC cord connector pins (with unit NOT connected to AC mains and its Power switch ON), and the face or front Panel of product and controls and chassis bottom.

Any resistance measurement less than 1 Megohms should cause unit to be repaired or corrected before AC power is applied, and verified before return to user/customer.

Ref. UL Standard No. 1270. Para. 66. 3. D (Mandatory Test after servicing Electrical Appliances, effective 7-1-88).

2. TEST EQUIPMENT REQUIRED FOR SERVICING

For measuring or checking your Cassette Deck, the following instruments and materials are necessary.

- VTVM
- Audio Oscillator (AF OSC)
- Attenuator (600Ω)
- Oscilloscope
- Bandpass Filter (1 kHz)
- IEC A-Curve Filter
- Wow and Flutter Meter
- Torque Meter (Cassette Type)
- Digital Frequency Counter
- Distortion Meter
- Blank Tapes (Completely erased with bulk eraser)
  TDK AC-212 (Normal)
  TDK AC-512 (Special/CrO_2)
  TDK AC-711 (Metal)

Note: If any doubt is noted in a measured value, use new tape.

● Test Tapes	(New Tape)
MTT-111	Wow and Flutter, Tape Speed
MTT-212	Measurements of Output Level Signal-to-Noise Ratio
MTT-150	Adjustment of Play Back Level
MTT-256	Frequency Response (for Normal)
MTT-356	Frequency Response (for Special/CrO_2 and Metal)
MTT-121	Cross Talk
MTT-141	Channel Separation

3. P.W. BOARDS

As can be seen from the circuit diagram, the chassis of your Cassette Deck consists of the following units. Each unit mounted on a printed circuit board is described within the square enclosed by a bold dotted line on the circuit diagram

1. R/P Main Amp. . . . . . mounted on P.W. Board PJ01
2. Rec Volume . . . . mounted on P.W. Board PJ02
3. Headphone Jack . . . . . mounted on P.W. Board PJ03
4. L.E.D Meter . . . . mounted on P.W. Board PX01
5. Power Switch . . . . mounted on P.W. Board P801
6. Dolby NR . . . . mounted on P.W. Board P601
(SD242)

4. ELECTRICAL ADJUSTMENTS

4.1 Precautions for Adjustment and Measurement

1) Before playing back the test tape, thoroughly demagnetize the heads, capstan and similar metal parts using an erase, as the test tape-recorded tone is easily erased.
2) Do not place the test tape on any measuring instrument.
3) Do not put the test tape near a place where the eraser is used.
4) Method of Demagnetization: Turn the eraser power switch on at a position far away from the heads. Bring the eraser close to the heads, capstan and other parts to be demagnetized, and move it up and down four or five times to demagnetize. Slowly separate the eraser far away from the parts, and turn the power switch off.
5) Do not use any magnetized adjusting tool. If necessary, demagnetize with a bulk eraser from time to time in the course of each adjustment.
6) Do not turn semi-fixed resistor or coil more than needed.
7) Measure speed and wow and flutter in the normal operating state.
8) Do not apply locking bond excessively.

4.2 Head Azimuth Adjustment

1. Set the TAPE SELECT Switch to the NORM position.
2. Play the 14 kHz signal of the test tape MTT256 back. Adjust the head azimuth adjusting screw for maximum VTVM reading.
3. If the peak output reads of the right and left channels are different, set the screws to obtain the mechanical center between the peaks.
4. After adjustment, repeat the playback and stop setting a few times to make certain of no head azimuth deciation.
5. Then, lock the screws with bond.
6. Make the same check for the reveres side.

Mode: Playback

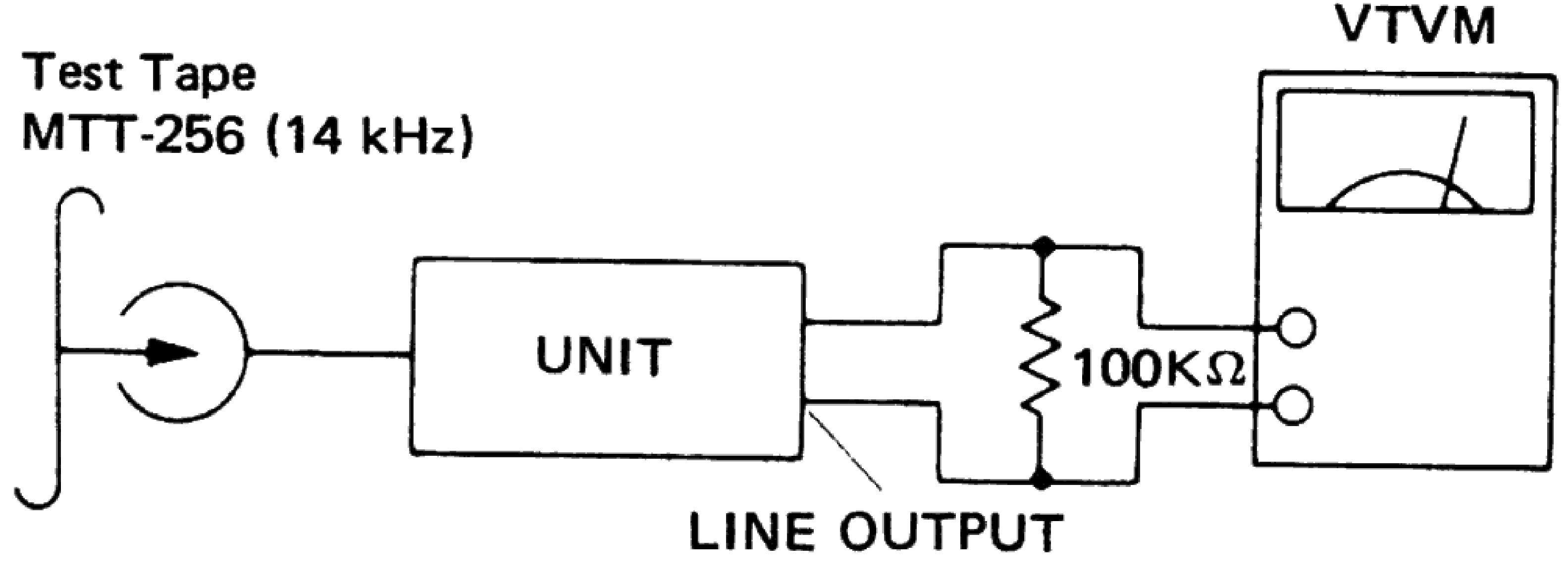

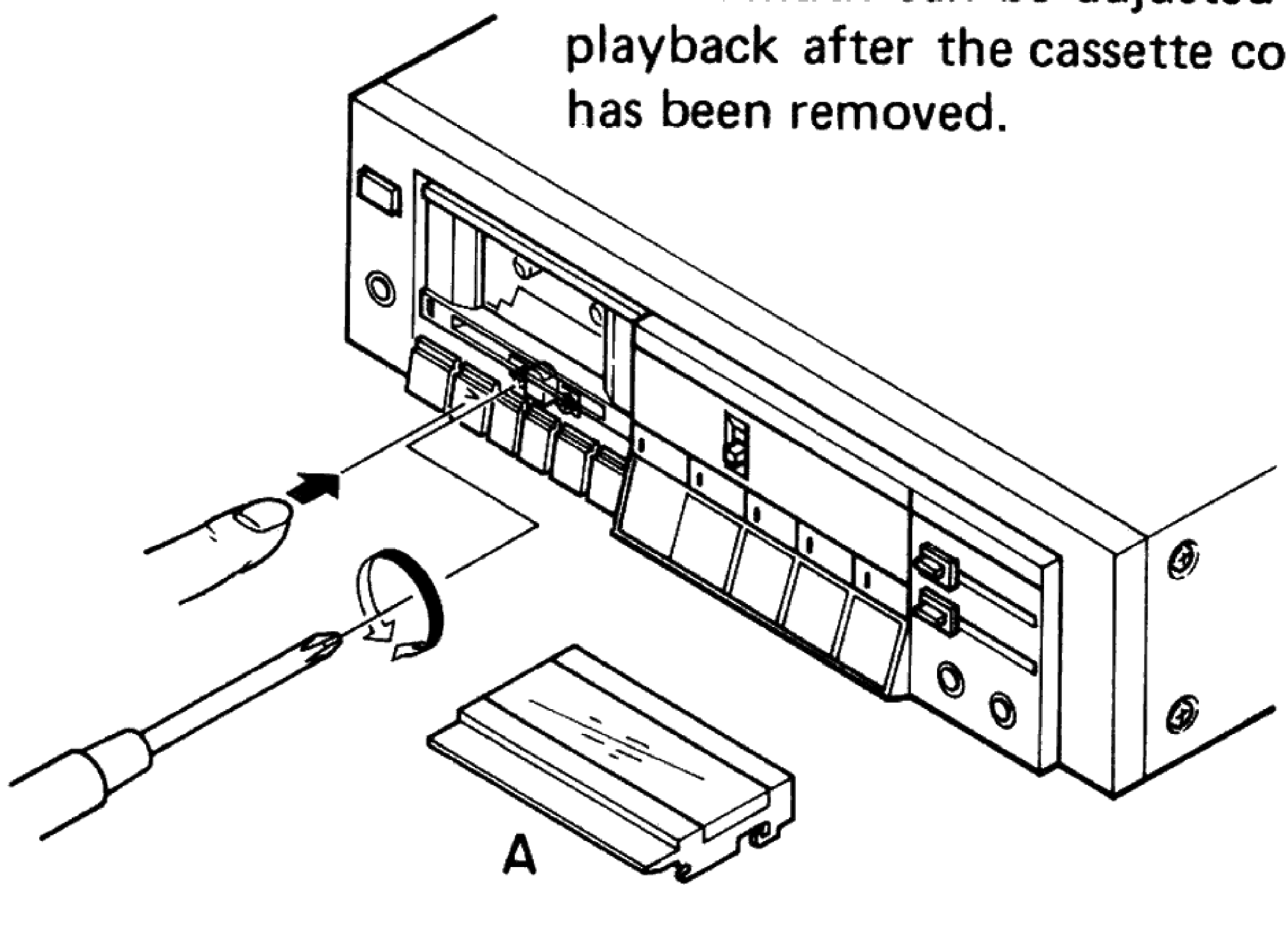

The aximuth can be adjusted during playback after the cassette cover (A) has been removed.

4.3 Tape Speed Adjustment

Play the 3 kHz signal of the test tape MTT-111 back. Adjust the tape speed adjusting resistor inside the motor (M071) for 3015 to 3030 Hz counter indication.

Notes:

1. If a strong shock of similar vibration is applied to the back after adjustment, make certain that the measured tape speed had not changed.
2. Be careful that the frequency counter may indicate a wrong value because of too low counter input level.
3. Before adjustment, allow for 30 seconds or more after depressing of the PLAY button.

Mode: Playback

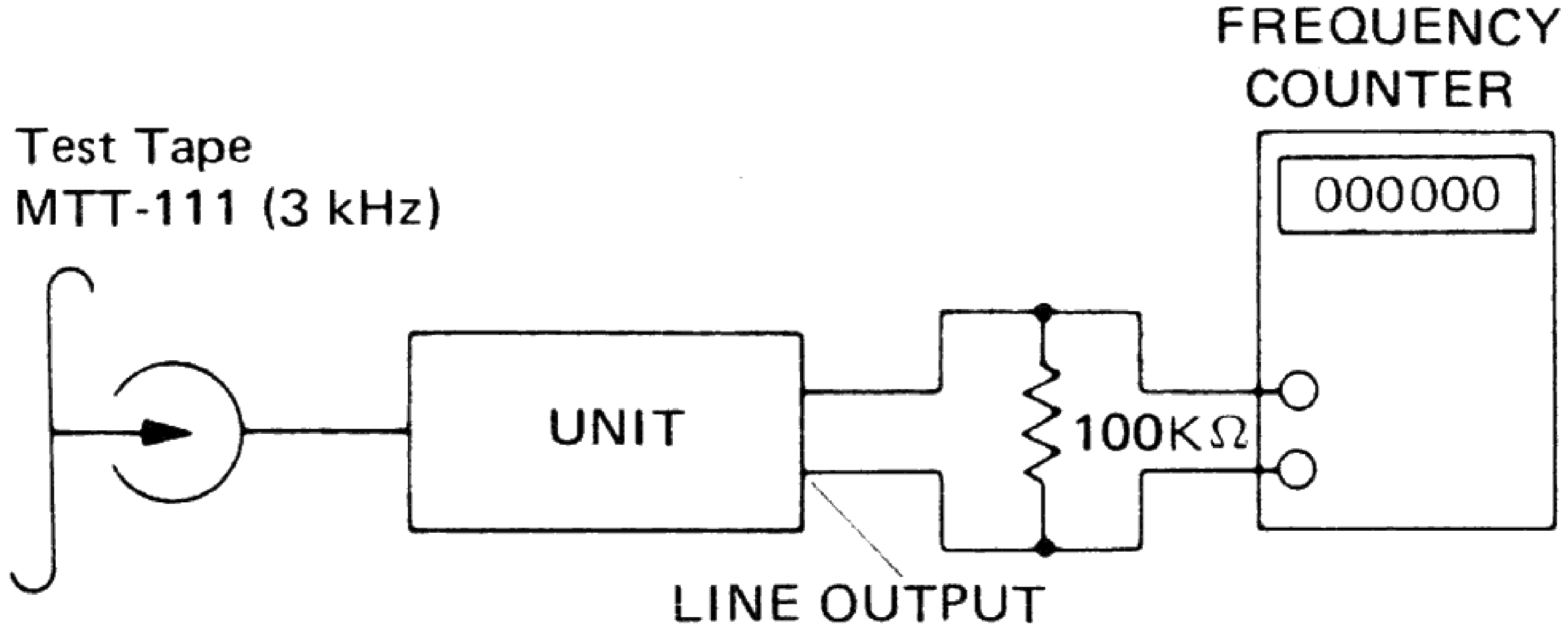

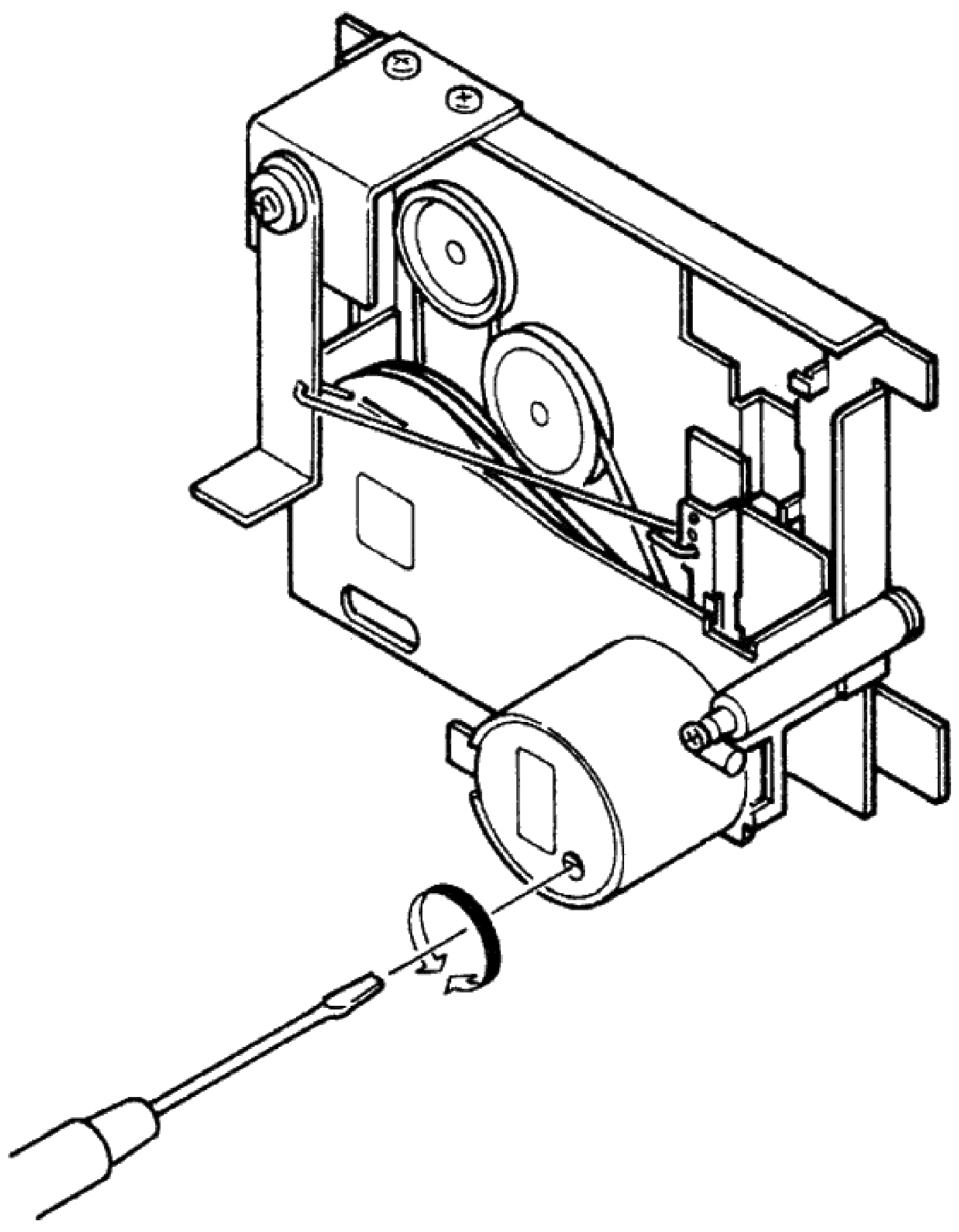

4.4 Playback Equalizer Measurement

1. Set the TAPE SELECTOR switch to the NORM position.
2. Playback the 315 Hz signal on test tape MTT-256 and adjust so that VTVM indication is 0 dB.
3. Playback the 12.5 kHz signal on test tape MTT-256 and make sure that indication is within 3 dB with respect to the 315 Hz signal.
4. Measurement the reverse side in the same manner.

Notes:

1. Proceed both for the right and left channels in the same manner.

Mode: Playback

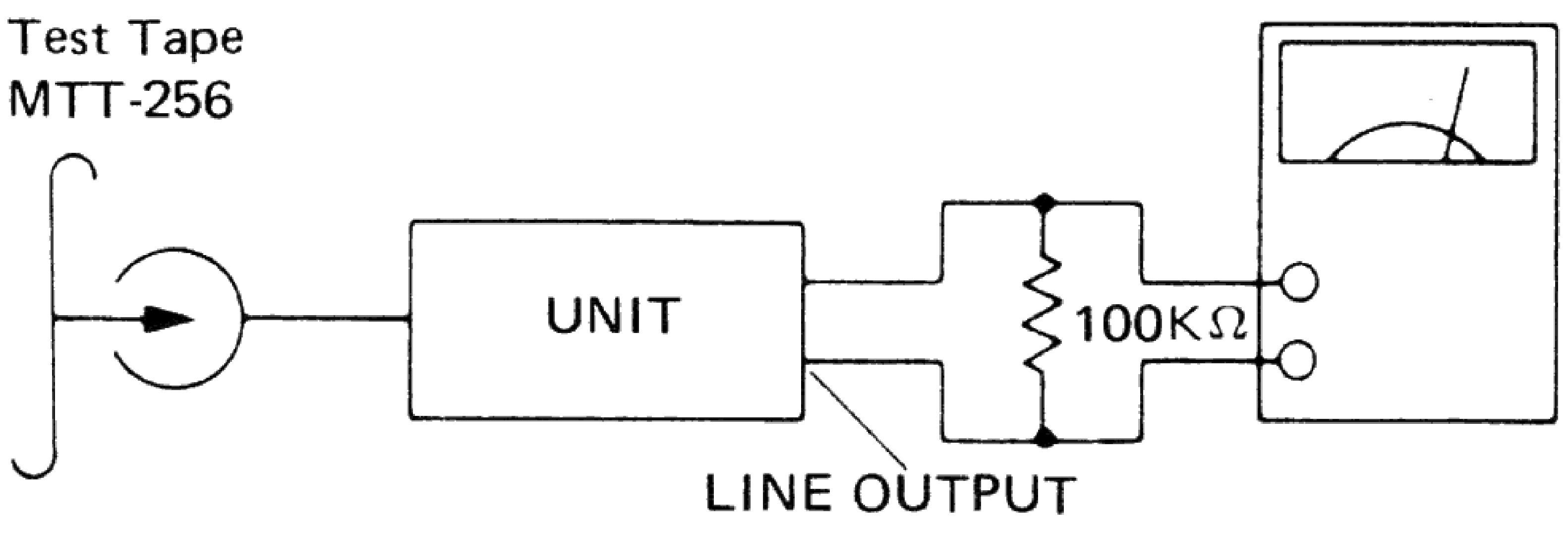

4.5 Playback Output Adjustment

1. Set the TAPE SELECTOR switch to the NORM position.
2. Playback the test tape MTT-150. Adjust RJ31 (L), RJ32 (R) so that the terminal voltage at the Dolby test points (TP05-L, TP06-R) becomes 580 mV.
3. After rewinding the tape, check that the voltage is still 580 mV when replaying it.
4. When checking at output terminal JJ04, please connect a 100 kohm load resistor, Output level is 390 mV.

Mode: Playback

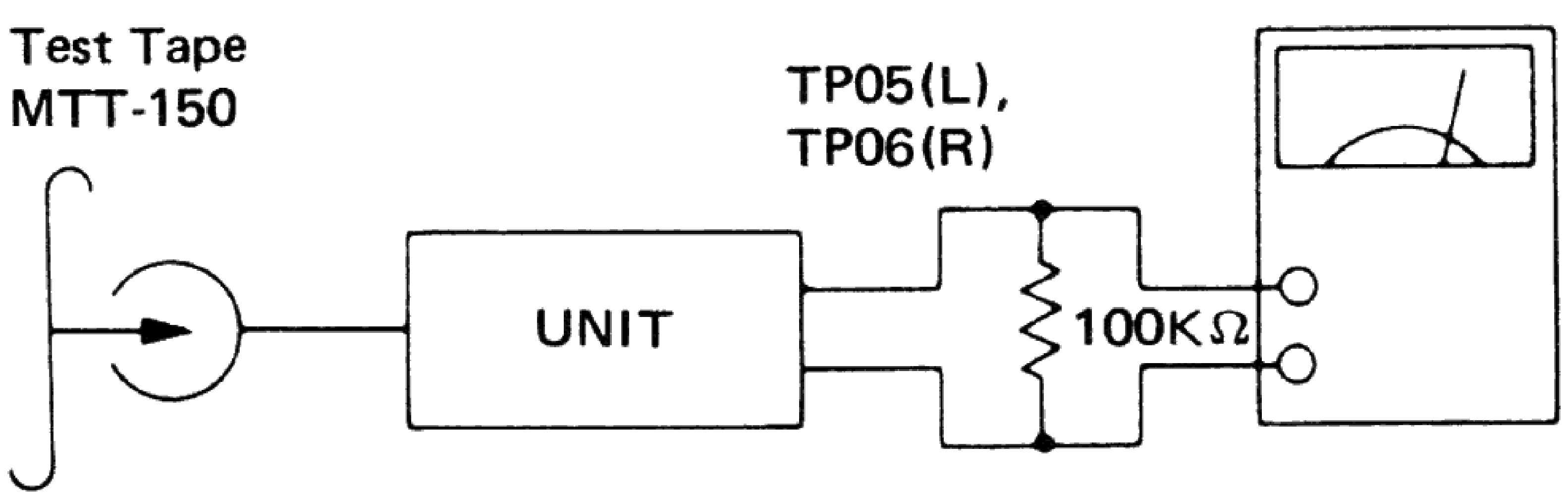

4.6 Peak Level Meter Measurement

1. Place a recording tape into the tape mechanism. Set the unit to record pause.
2. Apply a 1 kHz 100 mV signal to the LINE INPUT jack.
3. Adjust the input of the RX16 until the voltage at the Dolby test points (TP05-L and TP06-R) and at TP04 (GND) is 580 mV.
4. Check to make sure that under these conditions, the reading of the LED peak meter lights the DD mark (0dB).
5. Lower the input signal by −3 dB and confirm that the LED reading lights at −5 dB.

4.7 MPX Filter Adjustment

1. Set the TAPE SELECT switch to the NORM position.
2. Connect the 1 kHz, 100 mV input signal to the LINE INPUT cord.
3. Set up the deck to the recording state.
4. Adjust the REC LEVEL control for 0 dB meter reading
5. Adjust the line output level for 0 dB, and turn the DOLBY NR switch to the ON position.
6. Turn the input signal to the 19 kHz.
7. Adjust L601 (L) and L602 (R) for minimum output level.

Notes:

1. Proceed both for the right and left channels in the same manner.
2. If the filter characteristic is better than 30 dB, the MPX filter needs not to be adjusted.

Mode: Record

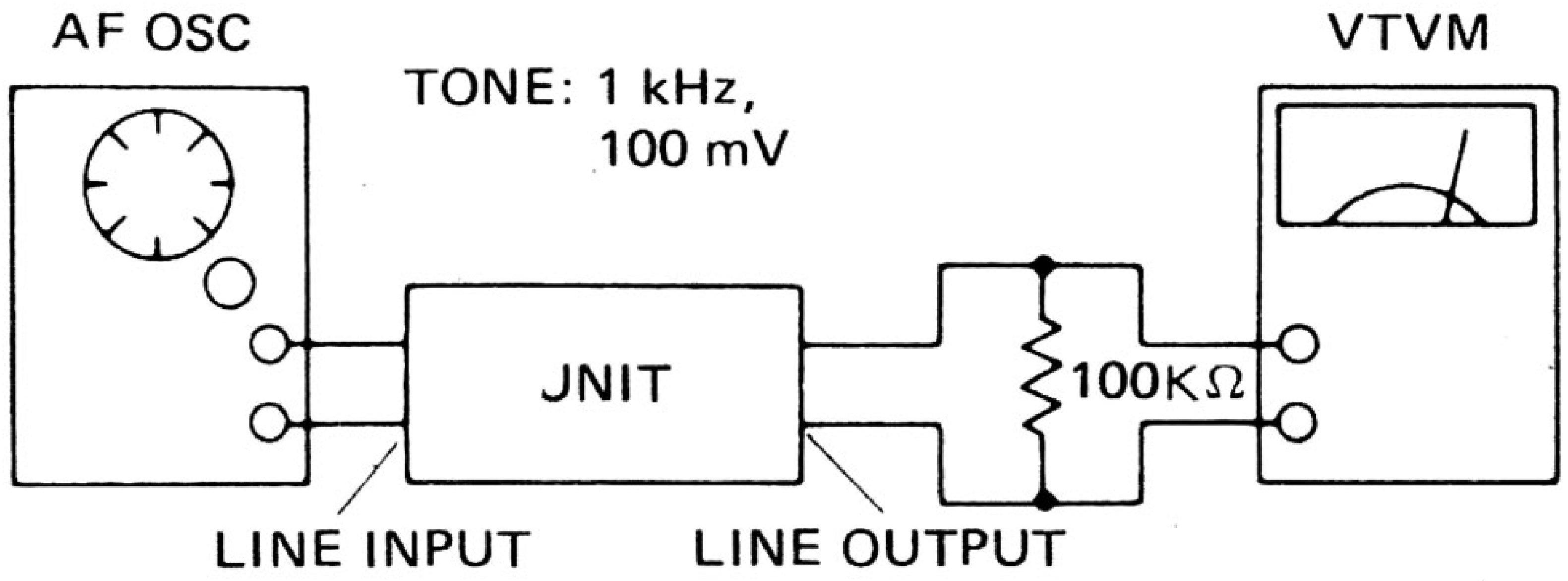
AF OSC
TONE: 1 kHz,
100 mV
VTVM
JNIT
100KΩ
LINE INPUT
LINE OUTPUT

4.8 Record-Playback Level Adjustment

1. Set the TAPE SELECT switch to the NROM position.
2. Connect the 1 kHz, –60 dBV signal to the MIC jack. Set up the deck to the recording state.
3. Adjust the REC Level control for 0 dB LED PEAK LEVEL meter reading.
4. Play the recorder portion back and adjust RK01 (L) and RK02 (R) for 0 dB LED PEAK LEVEL meter reading.

Proceed both for the right and left channels in the same manner.

Adjustment Point

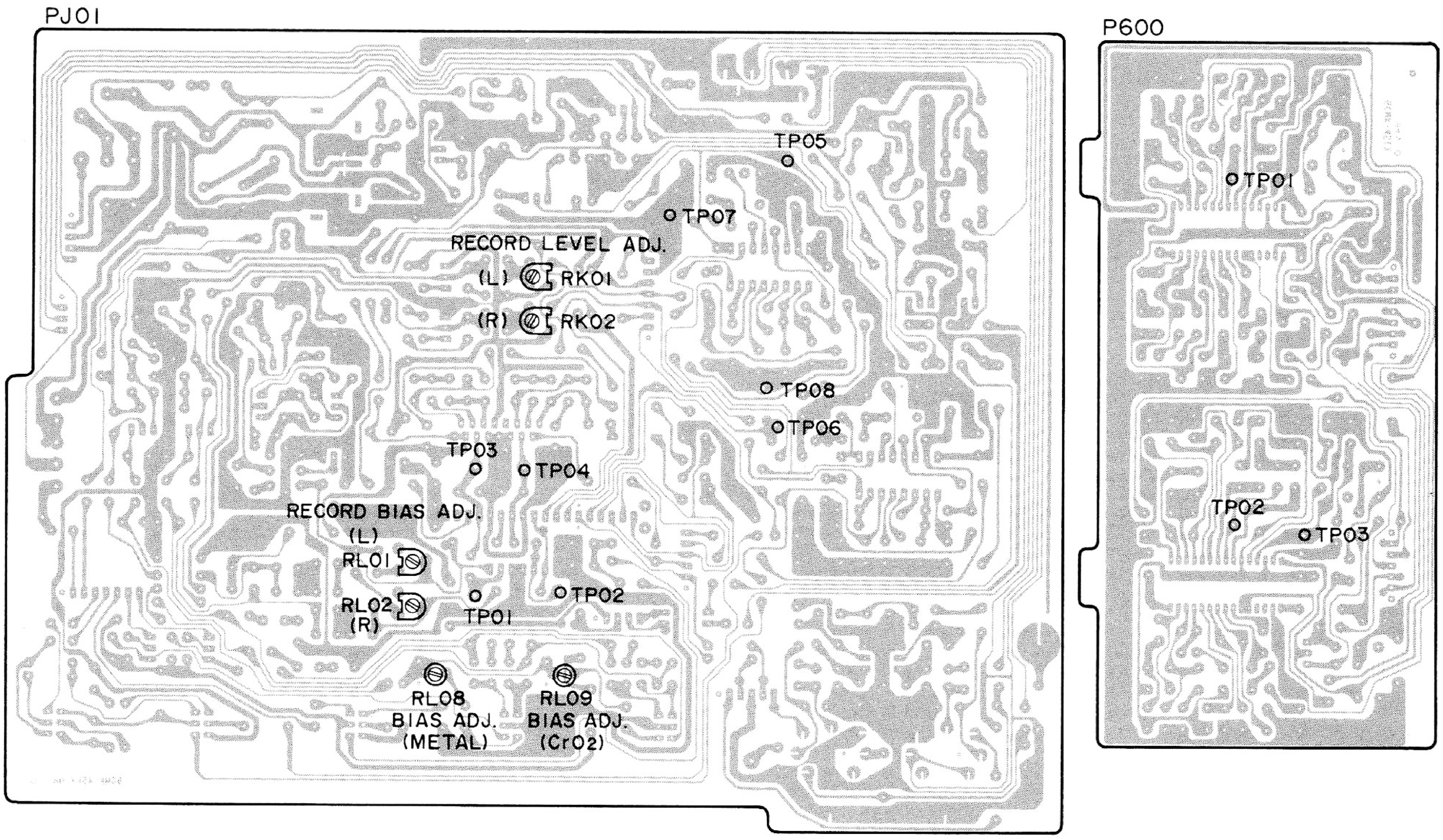
PJ01
TP05
TP07
RECORD LEVEL ADJ.
(L) RK01
(R) RK02
TP08
TP06
TP03
TP04
RECORD BIAS ADJ.
(L)
RL01
RL02
(R)
TP01
TP02
RL08
BIAS ADJ.
(METAL)
RL09
BIAS ADJ.
(CrO2)
P600
TP01
TP02
TP03

4.9 Recording/Playback Frequency Response Adjustment (SD242 Only)

1. Set the TAPE SELECT switch to the NORM position.
2. Connect the 1 kHz 100 mV Input signal to the LINE Input jack. Set up the deck to the REC PAUSE mode.
3. Adjust input level so that the peak level meter reads 0 dB.
4. Attenuate the output of the AF osillator by 25 dB.
5. Press the PAUSE button and start recoding.
6. After recoding the 1 kHz signal for about 5 seconds. Set the Frequency to 12.5 kHz. Same manner for another 5 seconds.
7. Press the REW button and return to the beginning of the recoding. PALY PAUSE mode is entered.
8. Press the PAUSE button to start Playback and adjust the semi-fixed resistor RL01 (L), RL02 (R) so that the difference between 1 kHz and 12.5 kHz level is from 0 dB to −1 dB.
9. Next, Repeat steps 6 to 8 using a CrO_2 tape, making the same adjustments. (Adjustment point RL09 L/R)
10. Perform the same steps for Metal tape as well. (Adjustment Point RL08 L/R)

Note: Independent adjustment of (L) and (R) is not possible for CrO_2, and METAL tapes. Use the NORMAL POSITION for adjustment if there is a great difference in levels.

4.10 Recording/Playback Frequency Response Adjustment (SD142 Only)

1. Set the TAPE SELECT switch to the NORM position.
2. Connect the 1 kHz 100 mV Input signal to the LINE Input jack. Set up the deck to the REC PAUSE mode.
3. Adjust input level so that the peak level meter reads 0 dB.
4. Attenuate the output of the AF osillator by 25 dB.
5. Press the PAUSE button and start recoding.
6. After recoding the 1 kHz signal for about 5 seconds. Set the Frequency to 12.5 kHz. Same manner for another 5 seconds.
7. Press the REW button and return to the beginning of the recoding. PALY PAUSE mode is entered.
8. Press the PAUSE button to start Playback and adjust the semi-fixed resistor RL01 (L), RL02 (R) so that the difference between 1 kHz and 12.5 kHz level is from 0 dB to −1 dB.

5. DISASSEMBLY

5.1 Removing the Top Cover

Remove the Top Cover after removing screws (1) to (6).

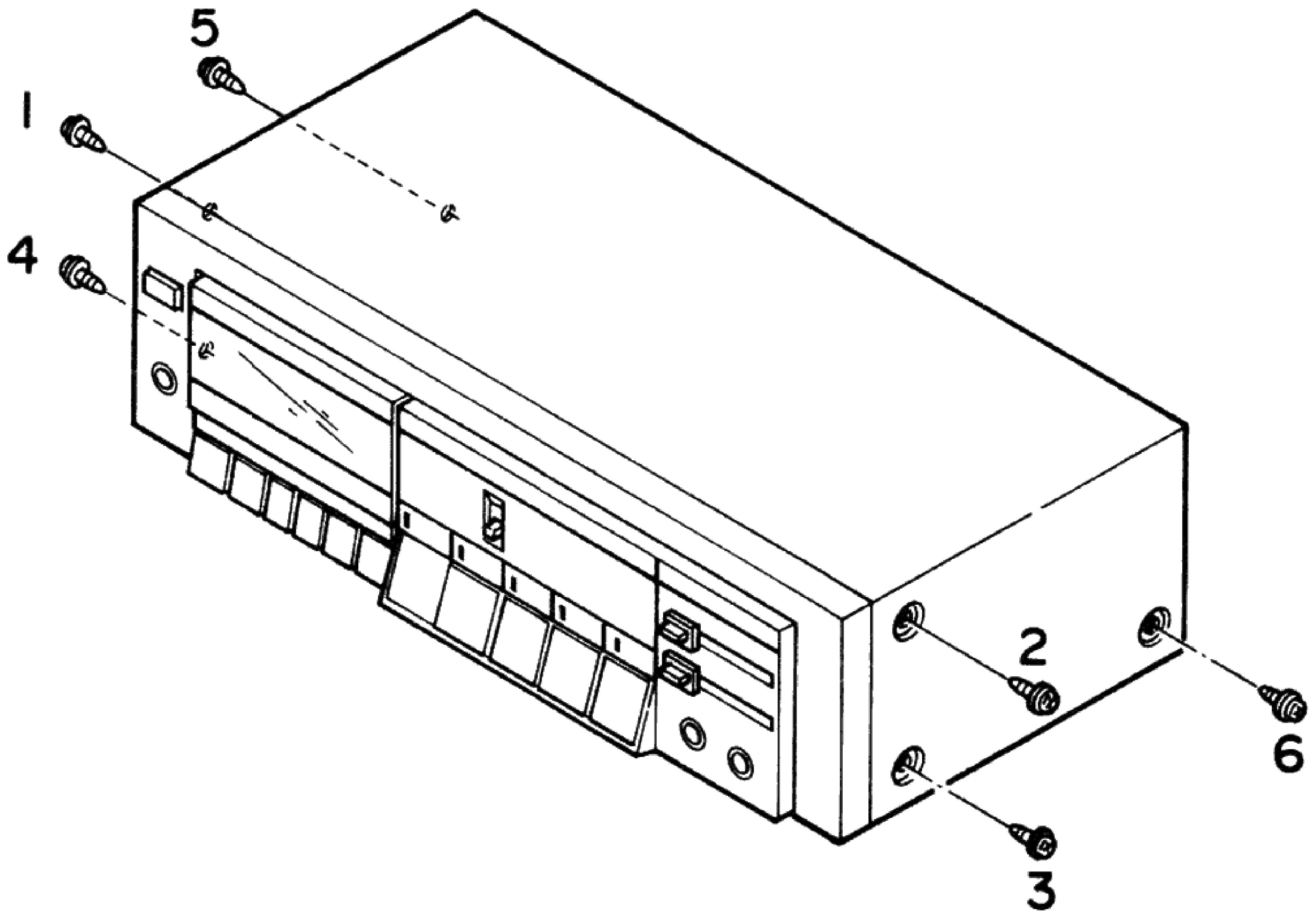

5.2 Removing the Front Panel

Remove screw (1) and link (A).
Screws (2) and (3) can be removed by taking off button (B).
Remove screws (4) to (8). The Front Panel can be removed after link (C) has been taken off.

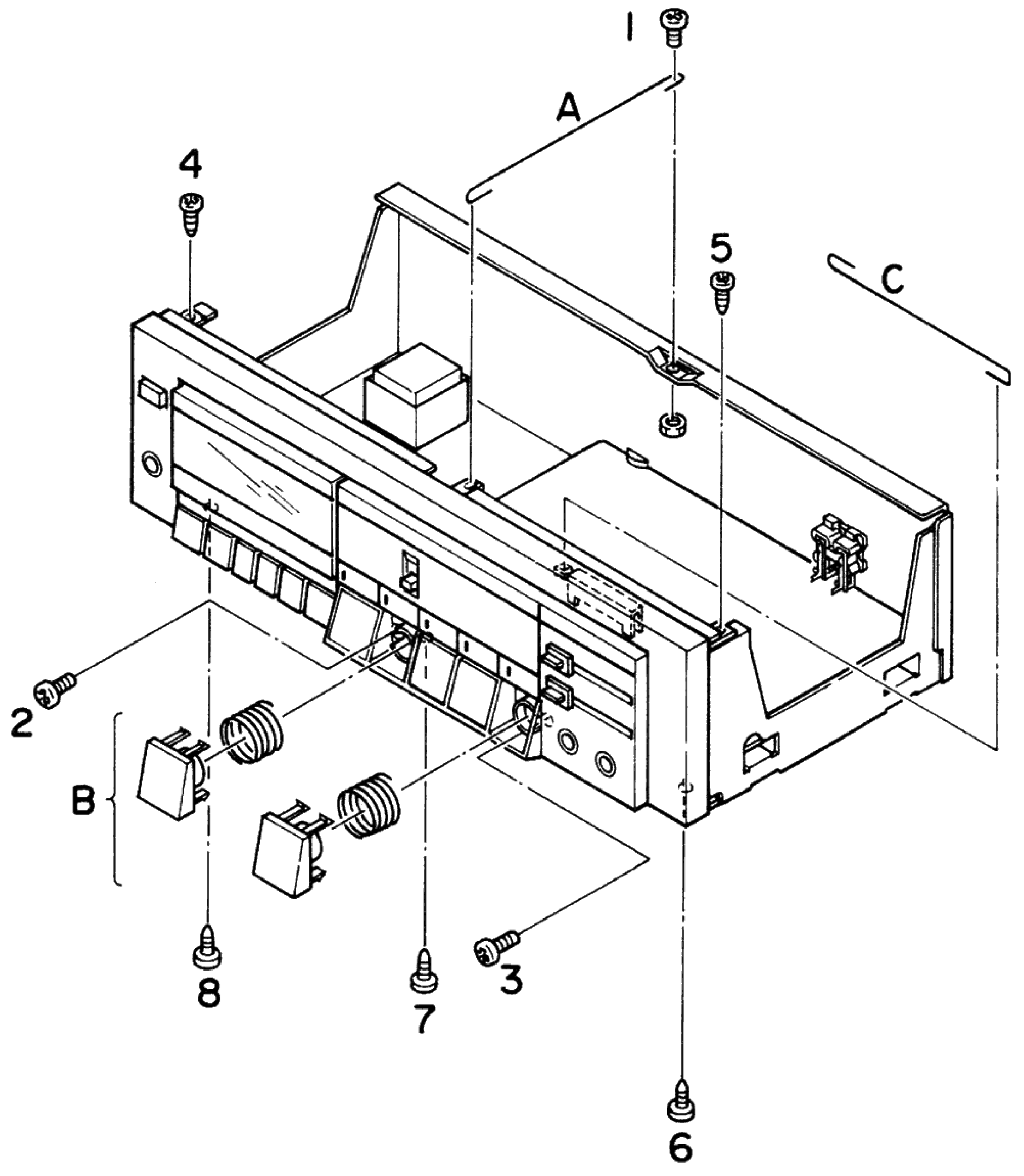

5.3 Removing the Mechanism

Remove screws (1) and (2). The cassette holder (D) can be removed after retainers (A), (B) and spring (C) have been taken off.
The mechanism and the counter belt can be removed after screws (3) to (6) have been removed.

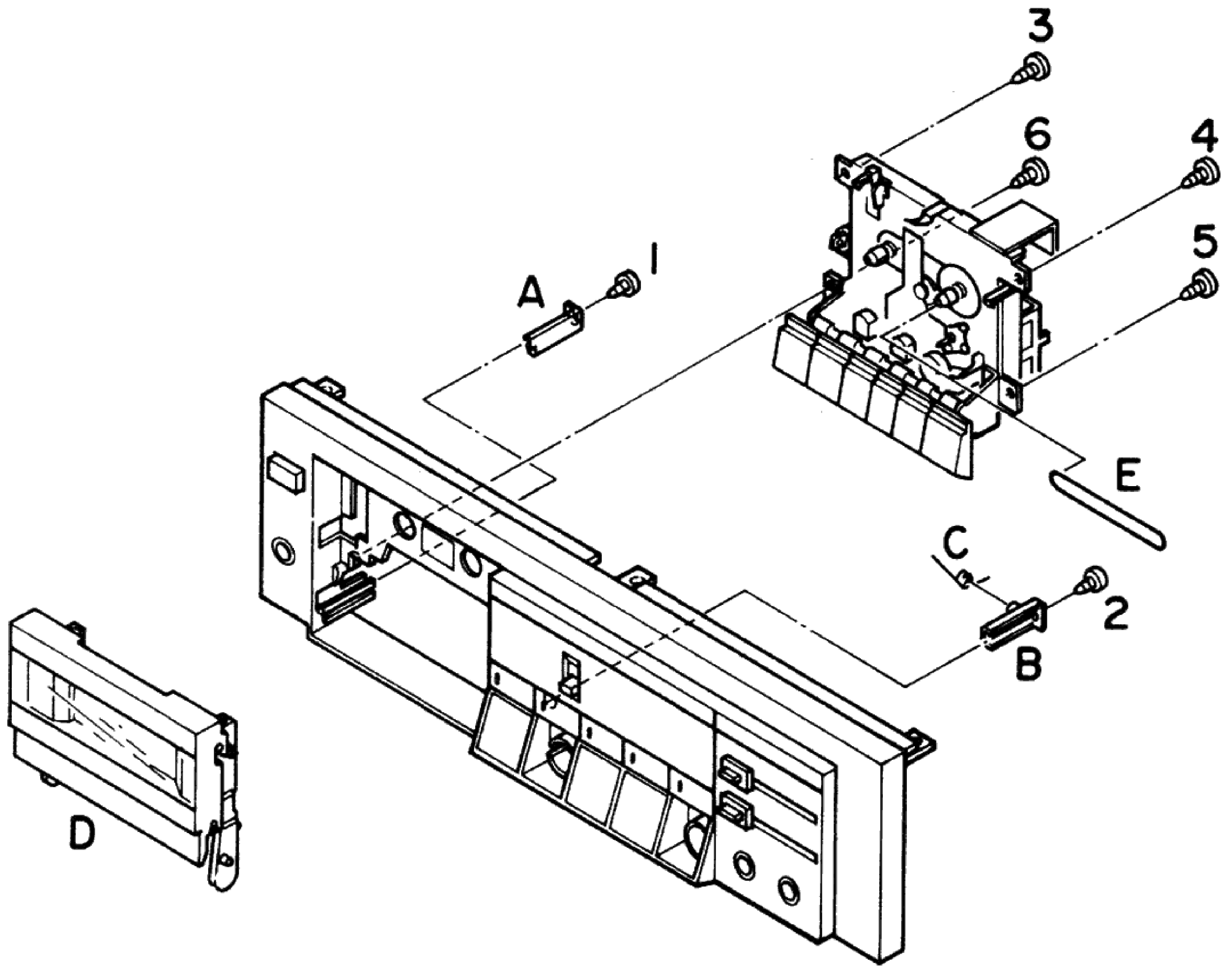

5.4 Removing the P.W. Board

The Dolby P.W. Board can be removed after the knob of clamp (A) has been taken off (only SD242)
The Main P.W. Board can be removed after screws (1) and (2) have been removed.

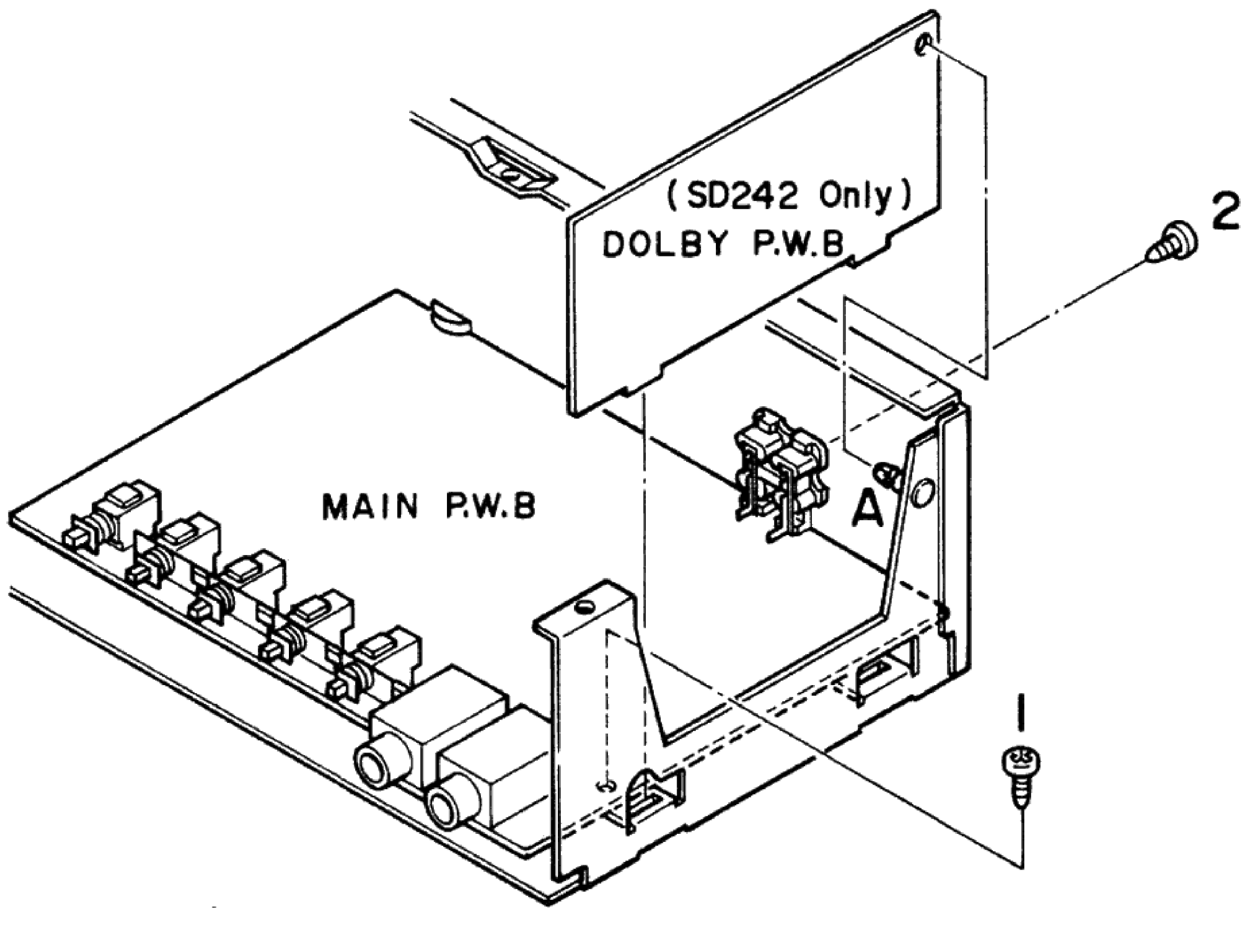

6. BLOCK/LEVEL DIAGRAMS

Recording Mode

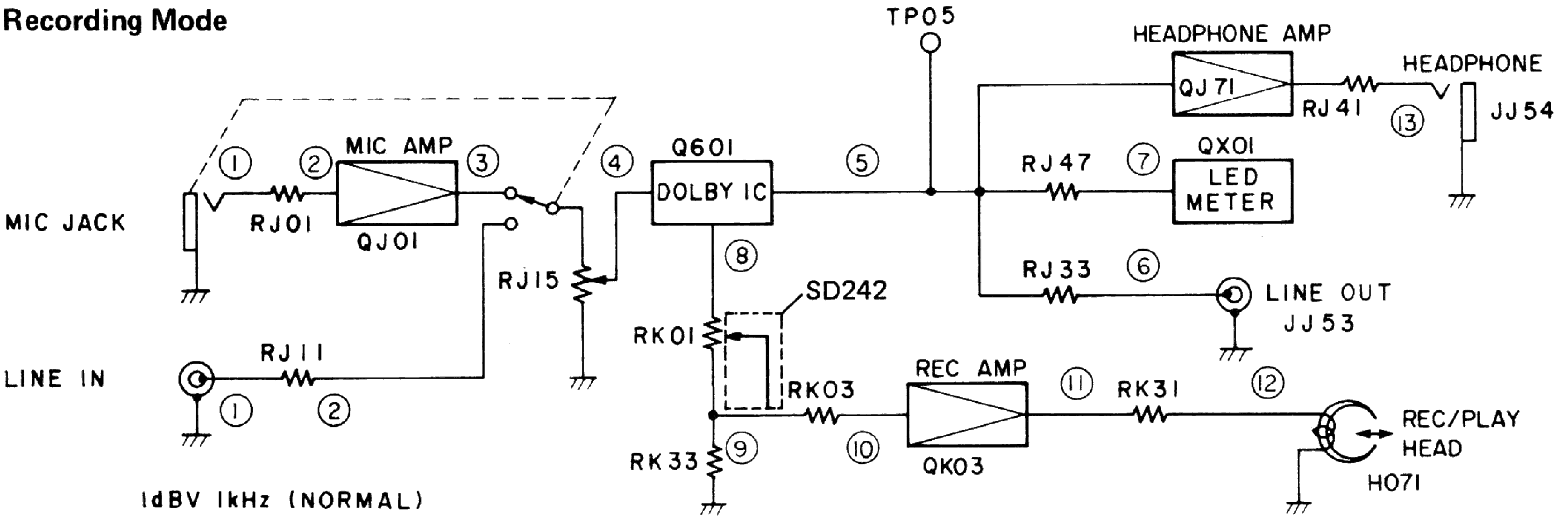
TP05
HEADPHONE AMP
QJ71
RJ41
⑬
HEADPHONE
JJ54
MIC JACK
①
②
MIC AMP
③
④
RJ01
QJ01
Q601
DOLBY IC
⑤
RJ47
⑦
QX01
LED METER
RJ33
⑥
LINE OUT
JJ53
⑧
RJ15
SD242
RK01
LINE IN
RJ11
①
②
RK03
REC AMP
⑪
RK31
⑫
REC/PLAY HEAD
H071
RK33
⑨
⑩
QK03

1dBV 1kHz (NORMAL)

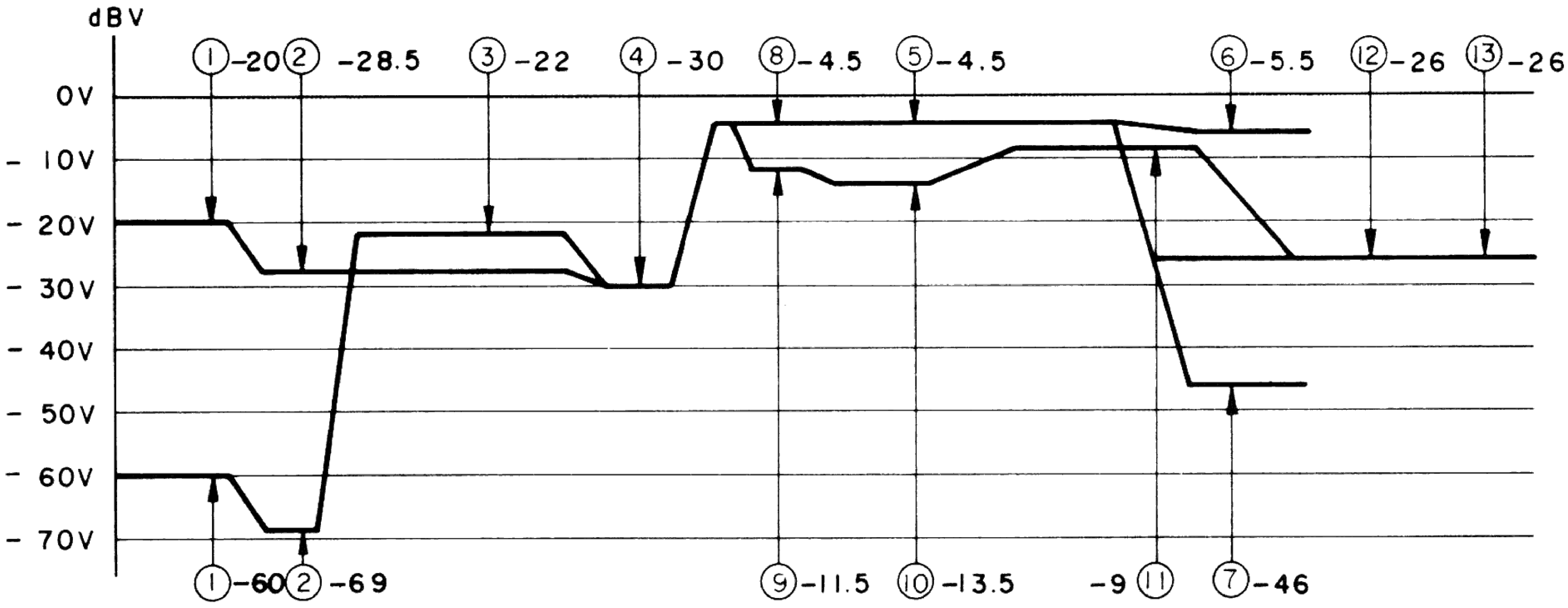

Playback Mode

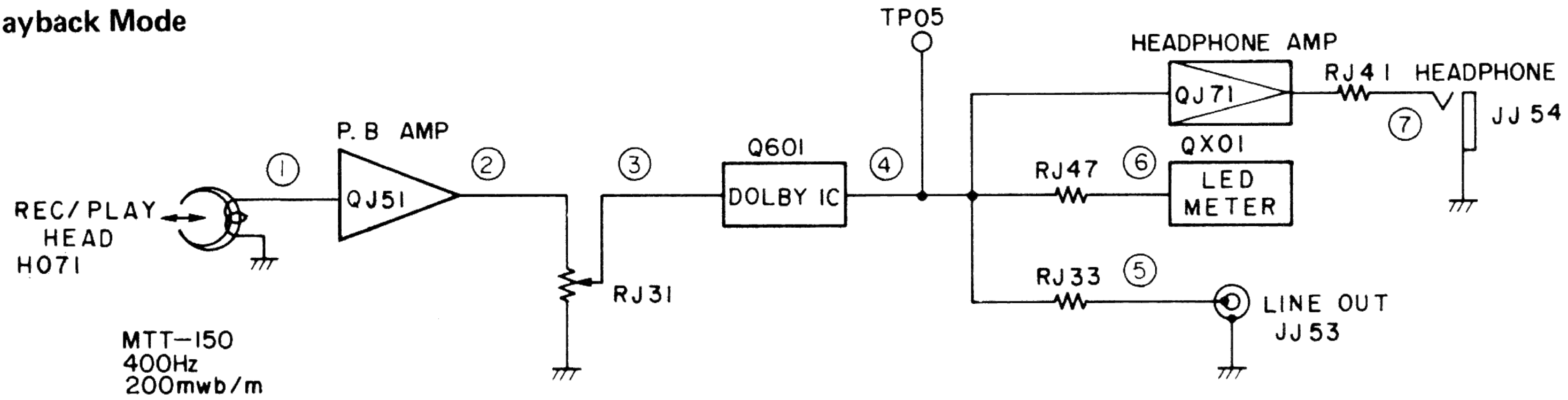
TP05
HEADPHONE AMP
QJ71
RJ41
HEADPHONE
⑦
JJ54
P. B AMP
①
②
③
Q601
④
QX01
REC/PLAY HEAD H071
QJ51
DOLBY IC
RJ47
⑥
LED METER
RJ31
RJ33
⑤
LINE OUT
JJ53

MTT-150
400Hz
200mwb/m

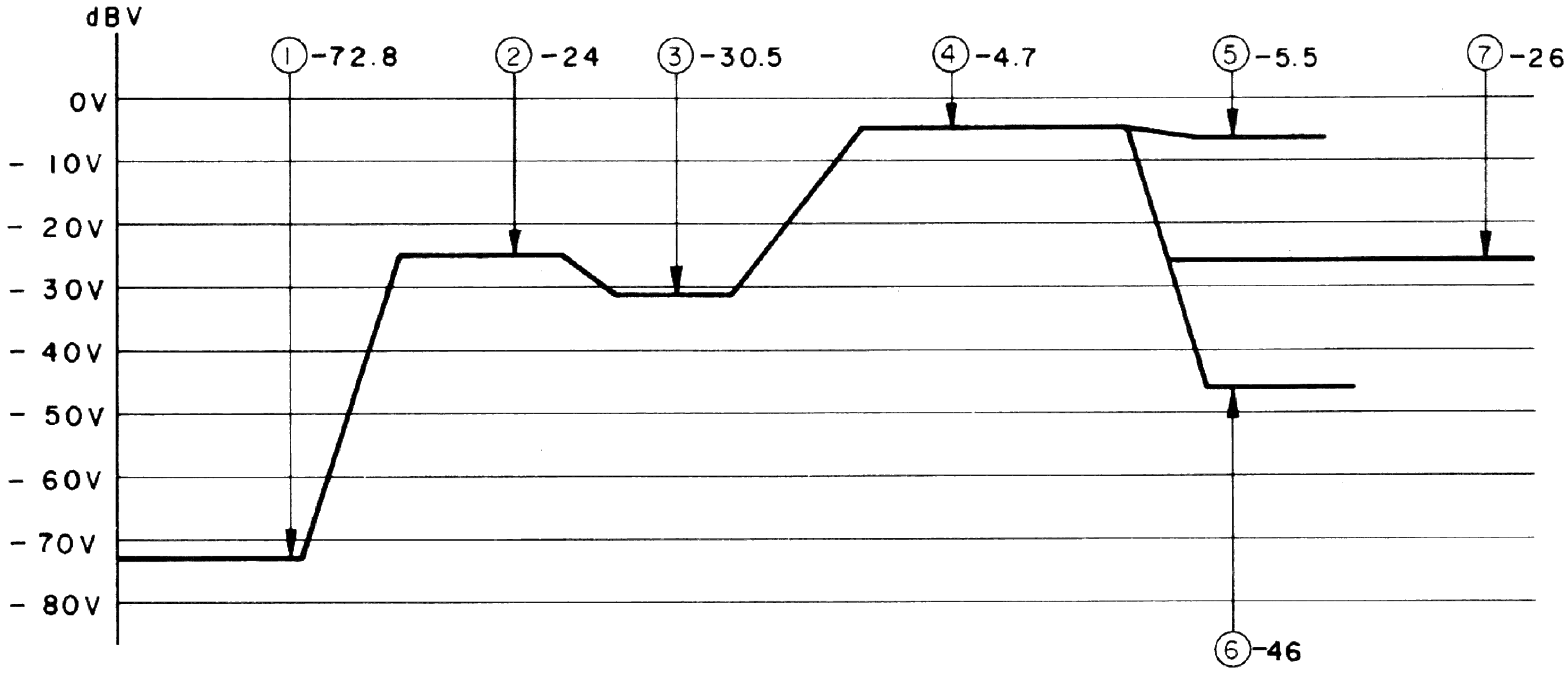

7. WIRING DIAGRAMS

P600 (SD242 ONLY)
GCMK-45EX 94V-0
Q601
Q602
Q603
Q604
L601
L602
L603
L604
TP1
TP2
TP3
W602
W601
PJ01
LINE IN
L R L R
JJ53
QU04
QU03
QU51
Q801
D801
D802
D803
D804
D805
D806
J802
J801
ORG
W801
QJ06
QJ05
QJ04
QJ03
QJ02
QJ01
TP05
TP07
TP08
TP6
SD142, SD242
SD142 ONLY
SD142
SD242
J602
J601
REC LEVEL
RK01 (L)
RK02 (R)
QK01
QK02
QK03
QK04
QJ51
JJ52
JJ51
SJ51
SJ52
SJ53
P.B LEVEL
RJ31 (L)
RJ32 (R)
QL01
QL02
QL03
LL01
LL02
TP4
TP3
TP2
TP1
REC BIAS ADJ.
RL01 L
RL02 R
BIAS ADJ. (CrO2)
BIAS ADJ. (METAL)
RL09
RL08
JX01
JU05
JU01
JU11
JU51
WJ02
QU01
QU02
RU22
RU07
DOLBY ON
DOLBY B/C
METAL
CrO2
NORMAL
MIC RCH
MIC LCH
JJ02
JJ01
PJ02
REC VOL.
RJ16
RJ15
JU14
CU14
WJ01
WX01
CX01
CX02
CX51
QX01
DX01
DX02
DX03
DX04
DX05
DX06
DX07
DX08
DX09
DX10
DU01
DU02
DU03
DU04
DU05
DU06
DU14
PX01
WU01
P801
POWER SWITCH
PJ03
HEADPHONE JACK
JU13
CU13
AC CORD
AC 120V / 60Hz
W001
L001
POWER TRANSFORMER
(U) VERSION
AC INLET
AC 240V / 50Hz
J091
(A) VERSION
JH73
BRN
BLK
ORG
YEL
GRN
PLAY ON SWITCH
S071
PAUSE ON SWITCH
S072
M071
MOTOR
ERASE HEAD
H072
JH72
WHT
GRY
To JJ52
REC / PLAY HEAD
H071
JH71
RED
To JJ51

8. EXPLODED VIEW AND PARTS LIST

- **[P01-99] Front Panel/Chassis and General Parts**

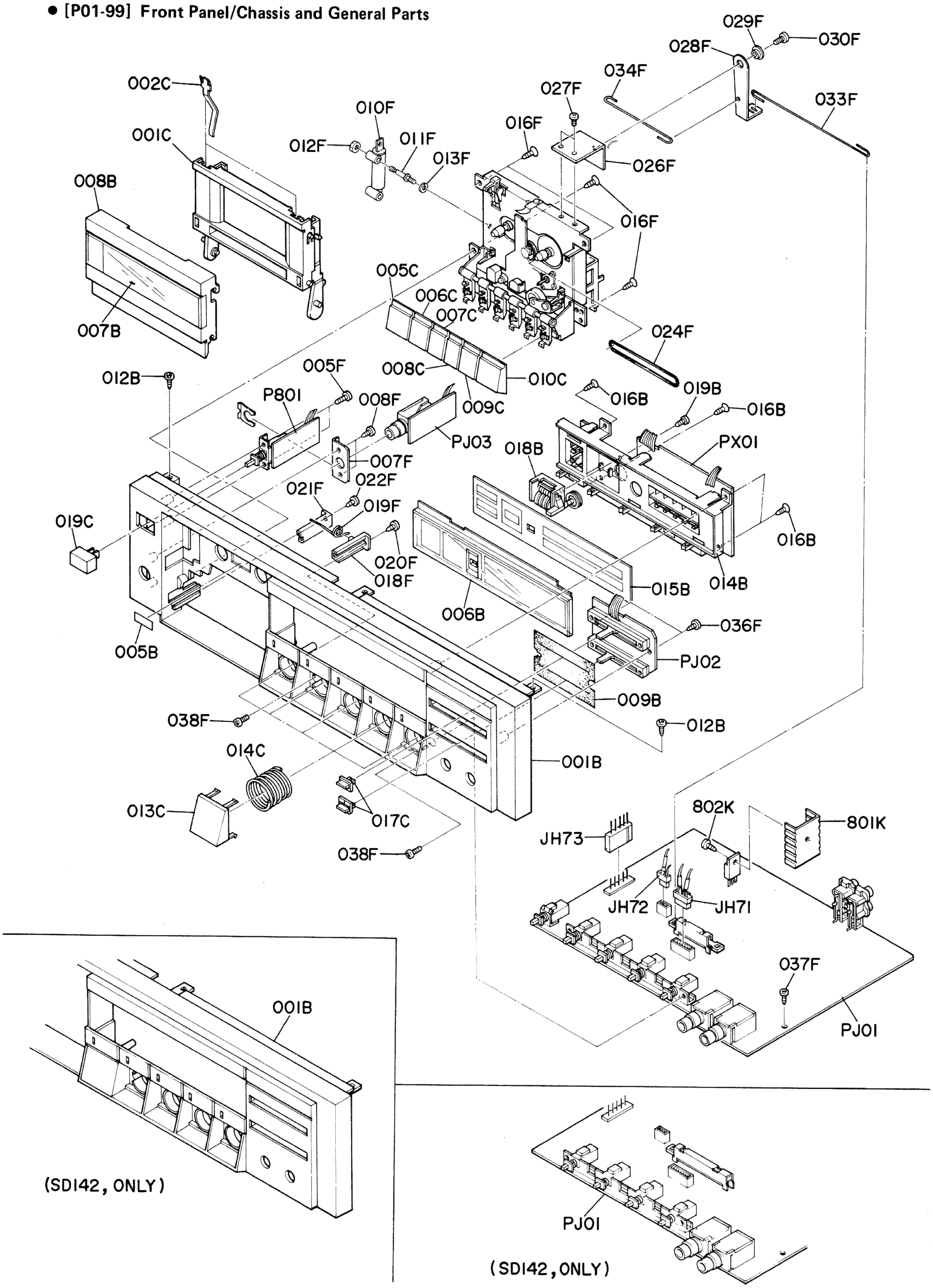

029F
028F
030F
034F
027F
033F
002C
010F
016F
001C
012F
011F
013F
026F
008B
016F
016F
005C
006C
007C
007B
024F
005F
008C
010C
012B
P801
008F
016B
019B
016B
009C
PJ03
018B
PX01
007F
022F
021F
019F
019C
016B
020F
018F
015B
014B
006B
036F
005B
PJ02
009B
038F
012B
014C
001B
013C
017C
802K
801K
JH73
038F
JH72
JH71
037F
PJ01
001B
(SD142, ONLY)
PJ01
(SD142, ONLY)

- (U): for U.S.A.
- (A): for Australia

REF. DESIG.	Q'TY U	Q'TY A	PART NO.	DESCRIPTION
				(SD142, ONLY)
A	1		177T248400	Front Panel Assembly
A1		1	177T248410	Front Panel Assembly
001B	1		177T248010	Front Panel
001B		1	177T248110	Front Panel
006B	1	1	177T158010	Window, L.E.D. Meter
				(SD242, ONLY)
A	1		178T248400	Front Panel Assembly
A1		1	178T248410	Front Panel Assembly
001B	1		178T248010	Front Panel
001B		1	178T248110	Front Panel
006B	1	1	177T158010	Window, L.E.D. Meter
005B	1	1	161T274010	Reflector
007B	1	1	177T158020	Window, Cassette Cover
008B	1	1	177T053010	Cover, Cassette (SD142)
008B	1	1	178T053010	Cover, Cassette (SD242)
009B	1	1	177T053020	Cover, Slide Volume
012B	2	2	51280308B0	B.H. Tapped Screw B3 x 8
014B	1	1	177T271010	Holder, LED
015B	1	1	177T265010	Indicator, LED (SD142)
015B	1	1	178T265010	Indicator, LED (SD242)
016B	4	4	51500310B0	F.H. Tapped Screw F3 x 10
018B	1	1	177T052010	Counter
019B	1	1	51282606B0	B.H. Tapped Screw B2.6 x 6
001C	1	1	160T271010	Holder, Cassette
002C	2	2	150T115010	Spring, Cassette Hold
005C	1	1	160T270110	Button, Rec
006C	1	1	160T270120	Button, Play
007C	1	1	160T270130	Button, REW
008C	1	1	160T270140	Button, FF
009C	1	1	160T270150	Button, Stop/Eject
010C	1	1	160T270160	Button, Pause
013C	4	4	143H270010	Button, Push Switch (SD142)
013C	5	5	143H270010	Button, Push Switch (SD242)
014C	4	4	444H115010	Spring, Push Switch (SD142)
014C	5	5	444H115010	Spring, Push Switch (SD242)
017C	2	2	143H154030	Knob, Record Level
019C	1	1	135H154050	Knob, Power Switch
005F	2	2	51280308B0	B.H. Tapped Screw B3 x 8
007F	1	1	177T104010	Retainer, Headphone Jack
008F	2	2	51280308B0	B.H. Tapped Screw B3 x 8
010F	1	1	120T276010	Piston, Dumper
011F	1	1	160T112020	Shaft, Dumper
012F	1	1	53110201E0	Hexagon Nut M2
013F	1	1	54040202A0	Spring Washer
016F	4	4	51500308B0	F.H. Tapped Screw F3 x 8
018F	1	1	160T104010	Retainer, Cassette Door; R

REF. DESIG.	Q'TY U	Q'TY A	PART NO.	DESCRIPTION
019F	1	1	160T115010	Spring, Cassette Door; R
020F	1	1	51280308B0	B.H. Tapped Screw B3 x 8
021F	1	1	160T104020	Retainer, Cassette Door; L
022F	1	1	51280308B0	B.H. Tapped Screw B3 x 8
024F	1	1	120T264010	Belt, Counter
026F	1	1	177T160010	Bracket, Rec Arm
027F	2	2	51282605B0	B.H. Tapped Screw B2.6 x 5
028F	1	1	177T002010	Arm, Rec
029F	1	1	177T055010	Collar, Rec Arm
030F	1	1	51100308A9	B.H.M. Screw B3 x 8
033F	1	1	177T121010	Link, L
034F	1	1	177T121020	Link, S
036F	2	2	51280308B0	B.H. Tapped Screw B3 x 8
037F	1	1	51280308B0	B.H. Tapped Screw B3 x 8
038F	2	2	51100308A9	B.H.M. Screw B3 x 8
801K	1	1	202H267030	Heatsink, Q801
802K	1	1	51300306B0	P.H. Taptite Screw P3 x 6
JH71	1	1	YB00400250	Connective Cord, 6P
JH72	1	1	YB00400260	Connective Cord, 3P
JH73	1	1	YJ06001050	Jack, 5P

● [P02-99] Main Chassis

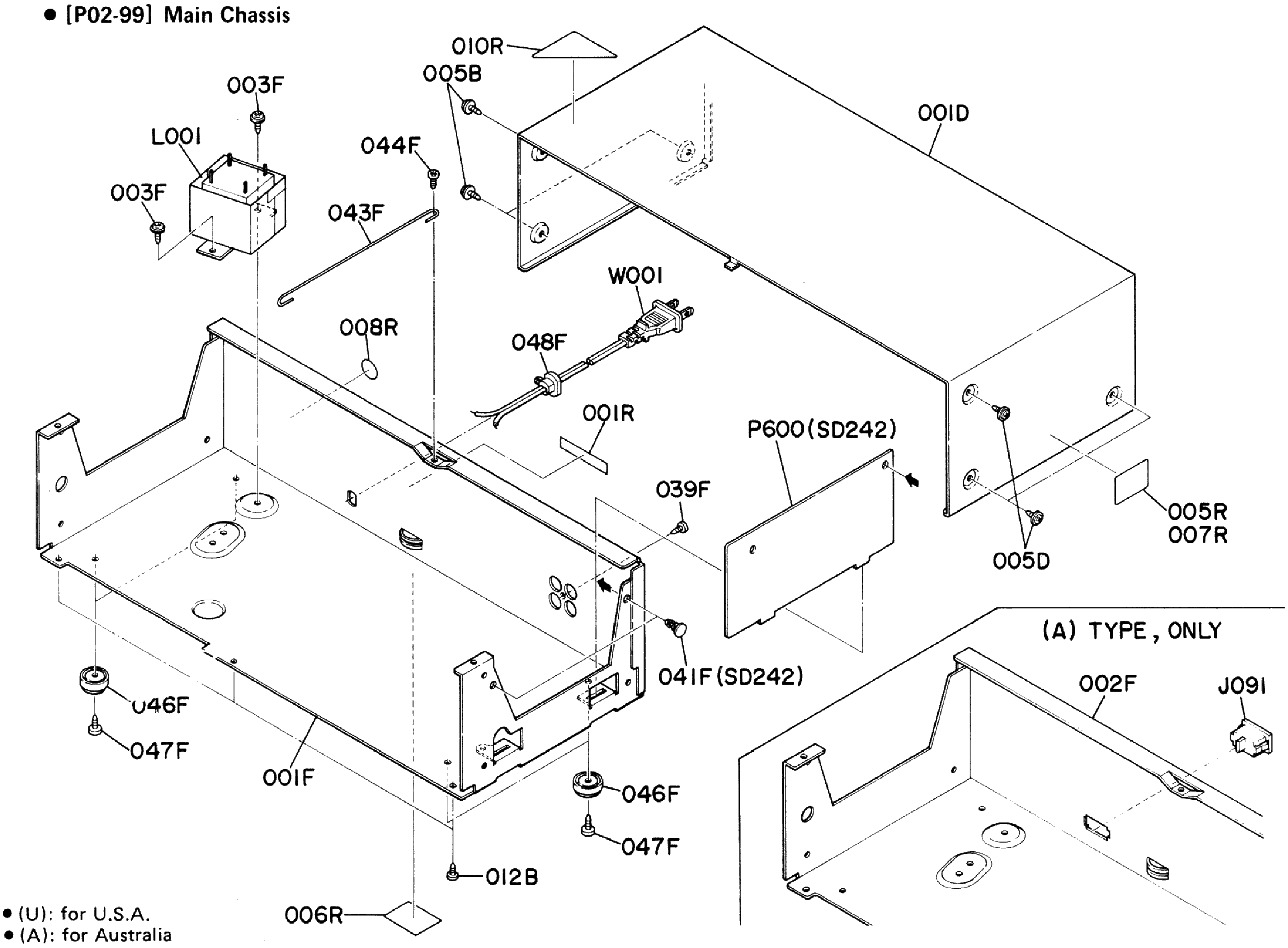
010R
005B
003F
L001
003F
044F
043F
001D
W001
008R
048F
001R
P600(SD242)
039F
005R
007R
005D
041F(SD242)
(A) TYPE, ONLY
002F
J091
046F
047F
001F
046F
047F
012B
006R

- (U): for U.S.A.
- (A): for Australia

REF. DESIG.	Q'TY U	Q'TY A	PART NO.	DESCRIPTION
012B	3		51280380B0	B.H. Tapped Screw B3 x 8
001D		1	177T257010	Lid, Top Cover; Gold
001D	1		177T257110	Lid, Top Cover; Black
005D	6	6	51706009U0	Special Set Screw
001F	1		177T105010	Chassis, Main (SD142)
001F	1		178T105010	Chassis, Main (SD242)
002F		1	177T105020	Chassis, Main (SD142)
002F		1	178T105020	Chassis, Main (SD242)
003F	2	2	51706009U0	Special Set Screw
039F	1	1	51280308B0	B.H. Tapped Screw B3 x 8
041F	2	2	177T101010	Support, Dolby PWB (SD242)
043F	1	1	160T121020	Link, Front Panel
044F	1	1	51280308B0	B.H. Tapped Screw B3 x 8
046F	4	4	416H057010	Leg
047F	4	4	51280408B0	B.H. Tapped Screw B4 x 8
048F	1		1455259030	Bushing, AC Power Cord

REF. DESIG.	Q'TY U	Q'TY A	PART NO.	DESCRIPTION
001R	1		2112265010	Indicator, Serial No. Card
001R		1	2112265110	Indicator, Serial No. Card
005R		1	2911861140	Label
006R		1	2911861110	Label
007R	1		117H861020	Label
008R	1		2457861040	Label, CSA
010R	1		113T861010	Label, 2 Year
⚠ J091		1	YP04000580	Plug, AC Inlet
⚠ L001	1		TS14133090	Power Transformer (SD142)
⚠ L001	1		TS14820110	Power Transformer (SD242)
⚠ L001		1	TS14133100	Power Transformer (SD142)
⚠ L001		1	TS14820120	Power Transformer (SD242)
⚠ W001	1		YC01900070	A.C. Power Cord
P600	1	1	YK178T0210	P.W. Board, Dolby-B/C NR (SD242)

● [P03-99] Parts Assembled on the Top of Chassis

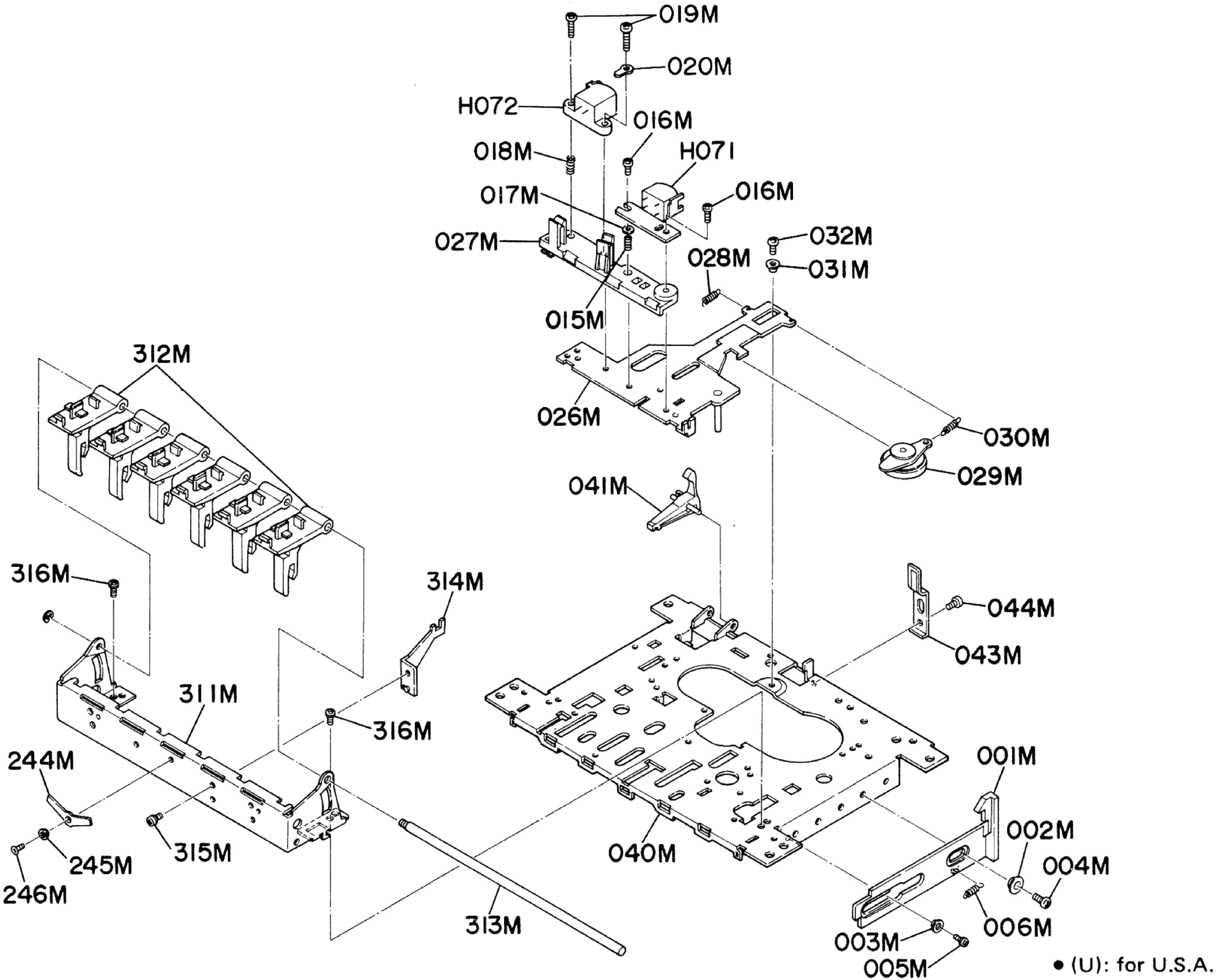
019M
020M
H072
016M
018M
H071
017M
016M
027M
032M
028M
031M
015M
312M
026M
030M
029M
041M
316M
314M
044M
043M
311M
316M
244M
001M
002M
004M
040M
245M
315M
246M
313M
006M
003M
005M

- (U): for U.S.A.
- (A): for Australia

REF. DESIG.	Q'TY	PART NO.	DESCRIPTION	
001M	1	160T258010	Hook, Eject	
002M	1	252T055100	Collar, Lower	
003M	1	252T055110	Collar, Upper	
004M	1	51572605B0	P. Taptite Screw	P2.6 x 5
005M	1	51440206A0	L. Washer Screw	L2 x 6
006M	1	252T115100	Spring, Eject Hook	
015M	1	252T115110	Spring, Head Azimuth	
016M	2	252T010100	Screw	
017M	1	252T012100	Washer	
018M	1	252T115110	Spring	
019M	2	51060208A0	P.H.M. Screw	P2 x 8
020M	1	62021030W0	Lug	
026M	1	252T105100	Chassis Assembly, Head	
027M	1	252T160110	Bracket, Head	
028M	1	252T115120	Spring	
029M	1	252T266100	Wheel, Take-up Idler	
030M	1	252T115130	Spring	
031M	1	252T055120	Collar	
032M	1	51102604S0	B.H.M. Screw	B2.6 x 4
040M	1	252T105110	Chassis, Main	

REF. DESIG.	Q'TY	PART NO.	DESCRIPTION	
041M	1	252T354100	Lever, Rec Arm	
043M	1	252T116100	Leaf Spring, Cassette Hold	
044M	1	51572603B0	P. Taptite Screw	P2.6 x 3
244M	1	161T354240	Lever, Pause Switch	
245M	1	252T055160	Collar	
246M	1	51840203S0	F.H.M. Screw	F2 x 3
311M	1	161T271200	Holder, Button	
312M	6	161T354220	Lever, Button	
313M	1	161T112200	Shaft, Button Lever	
314M	1	161T126200	Stay	
315M	1	51440204A0	L. Washer Screw	L2 x 4
316M	2	51442604A0	L. Washer Screw	L2.6 x 4
H071	1	LH42821020	Head, Rec/Play	
H072	1	LH31000580	Head, Erase	

- **[P04-99] Parts Assembled on the Reverse of Chassis**

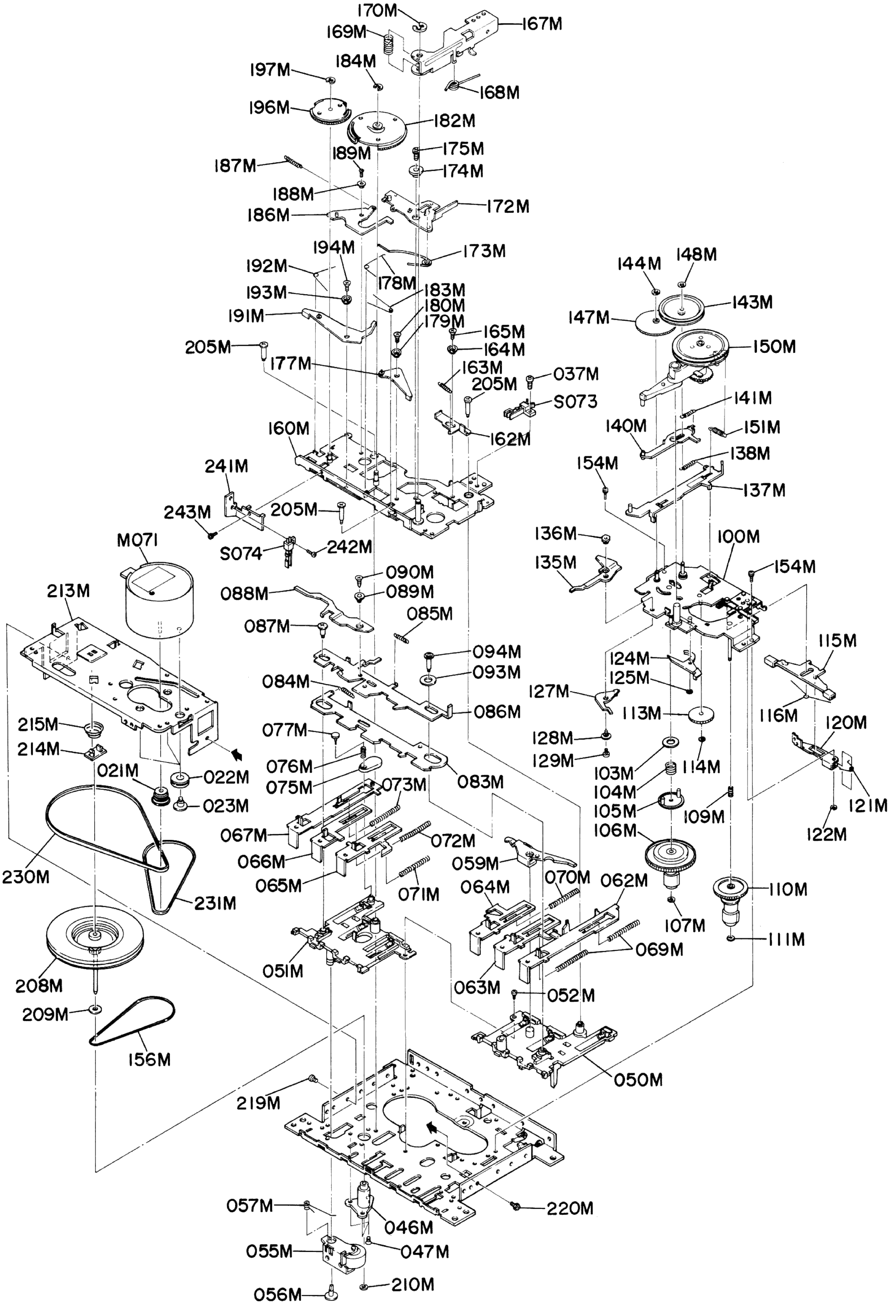
170M
169M
167M
197M
184M
168M
196M
182M
189M
175M
187M
174M
188M
186M
172M
194M
173M
192M
178M
183M
193M
180M
191M
179M
165M
164M
205M
177M
163M
205M
037M
S073
160M
162M
241M
205M
243M
S074
242M
M071
213M
090M
088M
089M
085M
087M
094M
093M
084M
086M
215M
214M
077M
021M
022M
076M
075M
073M
083M
023M
067M
072M
066M
059M
065M
071M
064M
070M
062M
230M
231M
051M
069M
208M
063M
052M
209M
156M
050M
219M
057M
046M
220M
055M
047M
056M
210M
144M
148M
143M
147M
150M
141M
140M
151M
138M
154M
137M
136M
100M
135M
154M
115M
124M
125M
127M
113M
116M
120M
128M
129M
103M
114M
104M
121M
105M
109M
106M
122M
110M
107M
111M

- (U): for U.S.A.
- (A): for Australia

REF. DESIG.	Q'TY	PART NO.	DESCRIPTION	
021M	1	161T262200	Pulley, Motor	
022M	3	252T259100	Bushing	
023M	3	252T010110	Screw	
037M	1	51060204A0	P.H.M. Screw	P2 x 4
046M	1	252T106100	Sustainer, Capstan	
047M	3	51840203S0	F.H.M. Screw	F2 x 3
050M	1	252T160120	Bracket, (L)	
051M	1	252T160130	Bracket, (R)	
052M	1	252T010120	Screw	
055M	1	252T354110	Lever Assembly, Pinch Arm	
056M	1	252T114110	Stopper	
057M	1	161T115200	Spring	
059M	1	252T354120	Lever, Rec Inter Lock	
062M	1	161T121200	Link, Rec	
063M	1	161T121210	Link, Play	
064M	1	161T121220	Link, REW	
065M	1	161T121230	Link, FF	
066M	1	161T121240	Link, Stop	
067M	1	161T121250	Link, Pause	
069M	2	252T115150	Spring, Rec/Play	
070M	1	252T115150	Spring, REW	
071M	1	252T115160	Spring, FF	
072M	1	252T115170	Spring, Stop	
073M	1	252T115160	Spring, Pause	
075M	1	252T054100	Cam, Pause Lock	
076M	1	252T115180	Spring	
077M	1	252T114120	Stopper	
083M	1	160T102200	Lock, Button	
084M	1	252T115200	Spring, Button Lock	
085M	1	252T115210	Spring, Motor SW.	
086M	1	252T127100	Control Board	
087M	1	252T010130	Screw	
088M	1	252T354140	Lever, Eject Kick	
089M	1	252T055160	Collar	
090M	1	51840225A0	F.H.M. Screw	F2 x 2.5
093M	1	54020401A0	Flat Washer, P.	
094M	1	252T010140	Screw	
100M	1	161T160210	Bracket Assembly, Reel Base	
103M	1	59050801G9	Washer	
104M	1	252T115220	Spring	
105M	1	252T266110	Wheel, Auto Stop Senser	
106M	1	161T117210	Spindle, Take-up Reel	
107M	1	161T114200	Stopper	
109M	1	161T115240	Spring	
110M	1	161T117200	Spindle, Supply Reel	
111M	1	161T114200	Stopper	
113M	1	252T058100	Gear, FF	
114M	1	252T114100	Stopper	
115M	1	161T354200	Lever Assembly, Brake Arm	
116M	1	161T115210	Spring	
120M	1	252T354150	Lever, Auto Stop Canceler	
121M	1	252T115240	Spring	
122M	1	64001500R9	RG Ring, E Type	
124M	1	252T354170	Lever, Head Kick	
125M	1	64001200R0	RG Ring, E Type	
127M	1	252T354160	Lever, Idler Kick	
128M	1	252T055160	Collar	
129M	1	51840245S0	F.H.M. Screw	F2 x 4.5
135M	1	252T354190	Lever, Release	
136M	1	252T055130	Collar	
137M	1	252T121160	Link Assembly, F/R Slide Lever	
138M	1	252T115260	Spring	
140M	1	252T354180	Lever, Sensing	
141M	1	252T115250	Spring	
143M	1	252T262110	Pulley, Auto Stop	
144M	1	252T114100	Stopper	
147M	1	252T058110	Gear, Auto Stop	
148M	1	252T114100	Stopper	
150M	1	252T262700	Pulley, F/R Clutch	
151M	1	161T115230	Spring, F/R Pulley	
154M	2	51440204A0	L. Washer Screw	L2 x 4
156M	1	252T264110	Belt, Auto Stop	
160M	1	161T160220	Bracket Assembly, Sub Chassis	
162M	1	252T121170	Link, Rec Function	
163M	1	252T115280	Spring	
164M	1	252T055160	Collar	
165M	1	51840228A0	F.H.M. Screw	F2 x 2.8
167M	1	252T354200	Lever, Rec Function Arm	
168M	1	252T115290	Spring, Over Stroke	
169M	1	252T115300	Spring	
170M	1	64000300R0	RG Ring, E Type	
172M	1	252T354240	Lever, Head Lift Arm	
173M	1	252T115350	Spring	
174M	1	252T055140	Collar	
175M	1	51442606A0	L. Washer Screw	L2.6 x 6
177M	1	252T354210	Lever, Trigger	
178M	1	252T115320	Spring	
179M	1	252T055150	Collar	
180M	1	51840228A0	F.H.M. Screw	F2 x 2.8
182M	1	252T058120	Gear, Main	
183M	1	252T115310	Spring, Main Gear	
184M	1	64000200R0	RG Ring, E Type	
186M	1	252T354230	Lever Assembly, Pause Sift	
187M	1	252T115340	Spring	
188M	1	252T055160	Collar	
189M	1	51840228A0	F.H.M. Screw	F2 x 2.8
191M	1	252T354220	Lever, Pause Gear	
192M	1	252T115330	Spring	
193M	1	252T055160	Collar	
194M	1	51840228A0	F.H.M. Screw	F2 x 2.8
196M	1	252T058130	Gear, Pause Sift	
197M	1	64000200R0	RG Ring, E Type	
205M	3	252T010150	Screw, Sub Chassis	
208M	1	161T059200	Capstan, Flywheel	
209M	1	59264705G9	Washer	
210M	1	316Y114030	Stopper, Oil Fence	
213M	1	161T160200	Bracket, Retainer	
214M	1	252T164100	Adjuster	
215M	1	252T115270	Spring	
219M	1	51060204A0	P.H.M. Screw	P2 x4
220M	1	51440204A0	L. Washer Screw	L2 x 4
230M	1	161T264210	Belt, Main	
231M	1	161T264200	Belt, FF/REW	
241M	1	161T160230	Bracket, Pause Switch	
242M	1	51060204A0	P.H.M. Screw	P2 x 4
243M	1	51440204A0	L. Washer Screw	L2 x 4
M071	1	MM11200270	D.C. Motor, 2400rpm	12V
S073	1	SM01011190	Mini Switch, Play Mut	
S074	1	SM01011190	Mini Switch, Pause	

● [H01-99] Packing Materials

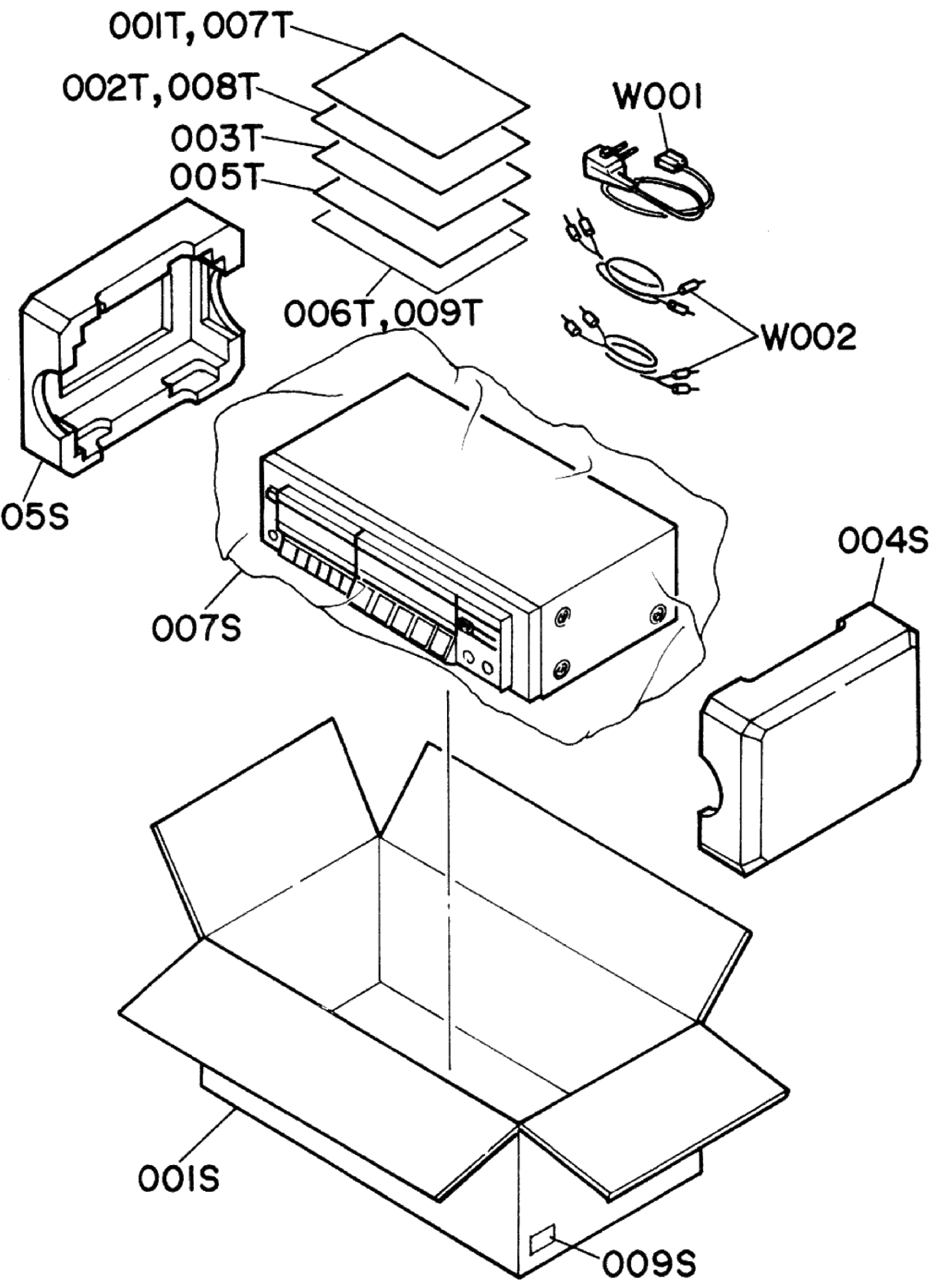

● (U): for U.S.A.
● (A): for Australia

REF. DESIG.	Q'TY U	Q'TY A	PART NO.	DESCRIPTION
001S	1		177T801010	Packing Case (SD142)
001S		1	177T801020	Packing Case (SD142)
001S	1		178T801010	Packing Case (SD242)
001S		1	178T801020	Packing Case (SD242)
004S	1	1	177T809010	Cushion, (R)
005S	1	1	177T809020	Cushion, (L)
007S	1	1	9014323130	Polyethylene Bag
009S	2		9526019020	Serial No. Card
009S		4	9526019030	Serial No. Card
001T	1		177T851210	User Manual
002T	1		177T851220	User Manual, Spec (SD142)
002T	1		178T851220	User Manual, Spec (SD242)
003T	1		103H854010	Warranty Card
005T	1		9650000050	S. Station Card
006T	1		101K854210	Warranty Card, Canada

REF. DESIG.	Q'TY U	Q'TY A	PART NO.	DESCRIPTION
007T		1	177T851310	User Manual
008T		1	177T851320	User Manual, Spec
008T		1	178T851320	User Manual, Spec
009T		1	9631000090	Warranty Card
⚠ W001		1	ZC02006020	A.C. Power Cord
W002	2	2	ZD01000170	Connective Cord, RCA Pin

9. ELECTRICAL PARTS LIST

- (U): for U.S.A.
- (A): for Australia

REF. DESIG.	Q'TY		PART NO.	DESCRIPTION			
	U	A					
				(SD142, ONLY)			
				PJ01-MAIN CIRCUIT BOARD			
PJ01	1	1	YK177T1510	P.W. Board, Main			
	1	1	ZZ177T1510	P.W. Board Assembly			
				PJ01-CAPACITORS			
CJ01	1	1	EA10601610	Elect	10μF		16V
CJ02	1	1	EA10601610	Elect	10μF		16V
CJ03	1	1	DD15101370	Ceramic	100pF	±5%	
CJ04	1	1	DD15101370	Ceramic	100pF	±5%	
CJ05	1	1	EA10601610	Elect	10μF		16V
CJ06	1	1	EA10601610	Elect	10μF		16V
CJ21	1	1	DD15681370	Ceramic	680pF	±5%	
CJ22	1	1	DD15681370	Ceramic	680pF	±5%	
CJ23	1	1	EA33601610	Elect	33μF		16V
CJ24	1	1	EA33601610	Elect	33μF		16V
CJ25	1	1	DF15103350	Film	0.01μF	±5%	
CJ26	1	1	DF15103350	Film	0.01μF	±5%	
CJ27	1	1	EA10601610	Elect	10μF		16V
CJ28	1	1	EA10601610	Elect	10μF		16V
CJ29	1	1	EA10601610	Elect	10μF		16V
CJ30	1	1	EA10601610	Elect	10μF		16V
CJ31	1	1	EA47601610	Elect	47μF		16V
CJ32	1	1	EA47601610	Elect	47μF		16V
CJ33	1	1	DD15101370	Ceramic	100pF	±5%	
CJ34	1	1	DD15101370	Ceramic	100pF	±5%	
CJ35	1	1	EA22405010	Elect	0.22μF		50V
CJ36	1	1	EA22405010	Elect	0.22μF		50V
CJ37	1	1	EA10601610	Elect	10μF		16V
CJ51	1	1	EA47601610	Elect	47μF		16V
CJ52	1	1	EA10601610	Elect	10μF		16V
CJ53	1	1	EA10701610	Elect	100μF		16V
CJ54	1	1	EA47601610	Elect	47μF		16V
CK01	1	1	EA10601610	Elect	10μF		16V
CK02	1	1	EA10601610	Elect	10μF		16V
CK03	1	1	DF15272310	Film	2700pF	±5%	
CK04	1	1	DF15272310	Film	2700pF	±5%	
CK05	1	1	EA10601610	Elect	10μF		16V
CK06	1	1	EA10601610	Elect	10μF		16V
CK07	1	1	DF15682310	Film	6800pF	±5%	
CK08	1	1	DF15682310	Film	6800pF	±5%	
CK09	1	1	EA22505010	Elect	2.2μF		50V
CK10	1	1	EA22505010	Elect	2.2μF		50V
CK11	1	1	EA10601610	Elect	10μF		16V
CK12	1	1	EA10601610	Elect	10μF		16V
CK13	1	1	DF15683350	Film	0.068μF	±5%	
CK14	1	1	DF15683350	Film	0.068μF	±5%	
CK15	1	1	DF15563350	Film	0.056μF	±5%	
CK16	1	1	DF15563350	Film	0.056μF	±5%	
CK17	1	1	DF15183350	Film	0.018μF	±5%	
CK18	1	1	DF15183350	Film	0.018μF	±5%	
CK19	1	1	DF15821350	Film	820pF	±5%	
CK20	1	1	DF15821350	Film	820pF	±5%	
CK21	1	1	DD15101370	Ceramic	100pF	±5%	
CK22	1	1	DD15101370	Ceramic	100pF	±5%	
CK51	1	1	EA47601610	Elect	47μF		16V
CL01	1	1	DF15221370	Film	220pF	±5%	
CL02	1	1	DF15221370	Film	220pF	±5%	
CL03	1	1	DF15562550	Film	5600pF	±5%	
CL04	1	1	EA47601630	Elect	47μF		16V
CL05	1	1	DF15332310	Film	3300pF	±5%	
CL06	1	1	DF15332310	Film	3300pF	±5%	
CL07	1	1	DF15682310	Film	6800pF	±5%	
CL08	1	1	EA10601630	Elect	10μF		16V
CL09	1	1	DF15103350	Film	0.01μF	±5%	
CL10	1	1	DF15103350	Film	0.01μF	±5%	
CL11	1	1	DF15103350	Film	0.01μF	±5%	
CU01	1	1	EA10701010	Elect	100μF		10V
CU02	1	1	EA10701010	Elect	100μF		10V
CU11	1	1	DK18102300	Ceramic	1000pF		
CU12	1	1	DK18102300	Ceramic	1000pF		
C601	1	1	EA47405010	Elect	0.47μF		50V
C602	1	1	EA47405010	Elect	0.47μF		50V
C603	1	1	EA10601610	Elect	10μF		16V
C604	1	1	EA10601610	Elect	10μF		16V
C605	1	1	DF15473350	Film	0.047μF		50V
C606	1	1	DF15473350	Film	0.047μF		50V
C607	1	1	EA33405010	Elect	0.33μF		50V
C608	1	1	EA33405010	Elect	0.33μF		50V
C609	1	1	EA10405010	Elect	0.1μF		50V
C610	1	1	EA10405010	Elect	0.1μF		50V
C611	1	1	EA22701010	Elect	220μF		10V
C613	1	1	DF15472310	Film	4700pF	±5%	
C614	1	1	DF15472310	Film	4700pF	±5%	
C615	1	1	DF15562310	Film	5600pF	±5%	
C616	1	1	DF15562310	Film	5600pF	±5%	
C617	1	1	DF15273350	Film	0.027μF	±5%	
C618	1	1	DF15273350	Film	0.047μF	±5%	
C619	1	1	EA47701610	Elect	470μF		16V
C620	1	1	EA47701610	Elect	470μF		16V
C621	1	1	EA10601610	Elect	10μF		16V
C622	1	1	EA10601610	Elect	10μF		16V
C623	1	1	DF15272310	Film	2700pF	±5%	
C624	1	1	DF15272310	Film	2700pF	±5%	
C625	1	1	EA47405010	Elect	0.47μF		50V
C627	1	1	EA10601610	Elect	10μF		16V
C628	1	1	EA10601610	Elect	10μF		16V
C801	1	1	EA10802530	Elect	1000μF		25V
C802	1	1	EA47701610	Elect	470μF		16V
C803	1	1	EA47601610	Elect	47μF		16V
				PJ01-RESISTORS			
				(All Resistors are ±5% and ¼W)			
RJ01	1	1	GD05472140	4.7KΩ			
RJ02	1	1	GD05472140	4.7KΩ			
RJ03	1	1	GD05105140	1MΩ			
RJ04	1	1	GD05105140	1MΩ			
RJ05	1	1	GD05332140	3.3KΩ			
RJ06	1	1	GD05332140	3.3KΩ			
RJ07	1	1	GD05473140	47KΩ			
RJ08	1	1	GD05473140	47KΩ			
RJ09	1	1	GD05473140	47KΩ			
RJ10	1	1	GD05473140	47KΩ			
RJ11	1	1	GD05333140	33KΩ			
RJ12	1	1	GD05333140	33KΩ			
RJ13	1	1	GD05473140	47KΩ			
RJ14	1	1	GD05473140	47KΩ			
RJ17	1	1	GD05471140	470Ω			
RJ21	1	1	GD05100140	10Ω			
RJ22	1	1	GD05100140	10Ω			
RJ23	1	1	GD05181140	180Ω			
RJ24	1	1	GD05181140	180Ω			
RJ25	1	1	GD05334140	330KΩ			
RJ26	1	1	GD05334140	330KΩ			
RJ27	1	1	GD05153140	15KΩ			

- (U): for U.S.A.
- (A): for Australia

REF. DESIG.	Q'TY U	Q'TY A	PART NO.	DESCRIPTION
RJ28	1	1	GD05153140	15KΩ
RJ29	1	1	GD05183140	18KΩ
RJ30	1	1	GD05183140	18KΩ
RJ31	1	1	RA04730600	47KΩ, Trimming
RJ32	1	1	RA04730600	47KΩ, Trimming
RJ33	1	1	GD05272140	2.7KΩ
RJ34	1	1	GD05272140	2.7KΩ
RJ35	1	1	GD05222140	2.2KΩ
RJ36	1	1	GD05222140	2.2KΩ
RJ37	1	1	GD05102140	1KΩ
RJ38	1	1	GD05102140	1KΩ
RJ39	1	1	GD05222140	2.2KΩ
RJ40	1	1	GD05222140	2.2KΩ
RJ41	1	1	GD05101140	100Ω
RJ42	1	1	GD05101140	100Ω
RJ43	1	1	GD05121140	120Ω
RJ44	1	1	GD05121140	120Ω
RJ45	1	1	GD05121140	120Ω
RJ46	1	1	GD05121140	120Ω
RJ47	1	1	GD05393140	39KΩ
RJ48	1	1	GD05393140	39KΩ
RJ49	1	1	GD05104140	100KΩ
RJ50	1	1	GD05104140	100KΩ
RJ51	1	1	GD05121140	120Ω
RJ52	1	1	GD05121140	120Ω
RJ53	1	1	GD05563140	56KΩ
RJ54	1	1	GD05471140	470Ω
RJ55	1	1	GD05333140	33KΩ
RJ61	1	1	GD05104140	100KΩ
RJ62	1	1	GD05104140	100KΩ
RK01	1	1	GD05223140	22KΩ
RK02	1	1	GD05223140	22KΩ
RK03	1	1	GD05103140	10KΩ
RK04	1	1	GD05103140	10KΩ
RK05	1	1	GD05103140	10KΩ
RK06	1	1	GD05103140	10KΩ
RK07	1	1	GD05123140	12KΩ
RK08	1	1	GD05123140	12KΩ
RK09	1	1	GD05104140	100KΩ
RK10	1	1	GD05104140	100KΩ
RK11	1	1	GD05474140	470KΩ
RK12	1	1	GD05474140	470KΩ
RK13	1	1	GD05562140	5.6KΩ
RK14	1	1	GD05562140	5.6KΩ
RK15	1	1	GD05122140	1.2KΩ
RK16	1	1	GD05122140	1.2KΩ
RK17	1	1	GD05104140	100KΩ
RK18	1	1	GD05104140	100KΩ
RK19	1	1	GD05332140	3.3KΩ
RK20	1	1	GD05332140	3.3KΩ
RK21	1	1	GD05122140	1.2KΩ
RK22	1	1	GD05122140	1.2KΩ
RK23	1	1	GD05822140	8.2KΩ
RK24	1	1	GD05822140	8.2KΩ
RK25	1	1	GD05222140	2.2KΩ
RK26	1	1	GD05222140	2.2KΩ
RK27	1	1	GD05121140	120Ω
RK28	1	1	GD05121140	120Ω
RK29	1	1	GD05223140	22KΩ
RK30	1	1	GD05223140	22KΩ
RK31	1	1	GD05822140	8.2KΩ
RK32	1	1	GD05822140	8.2KΩ
RK51	1	1	GD05152140	1.5KΩ

REF. DESIG.	Q'TY U	Q'TY A	PART NO.	DESCRIPTION	
RL01	1	1	RA04730600	47KΩ, Trimming	
RL02	1	1	RA04730600	47KΩ, Trimming	
RL03	1	1	GD05153140	15KΩ	
RL04	1	1	GD05153140	15KΩ	
RL05	1	1	GD05033140	3.3Ω	
RL06	1	1	GD05471140	470Ω	
RL07	1	1	GD05271140	270Ω	
RL08	1	1	GD05222140	2.2KΩ	
RL09	1	1	GD05821140	820Ω	
RL10	1	1	GG05033140	3.3Ω	
RU01	1	1	GD05103140	10KΩ	
RU02	1	1	GD05821140	820Ω	
RU03	1	1	GD05103140	10KΩ	
RU04	1	1	GD05821140	820Ω	
RU05	1	1	GD05821140	820Ω	
RU06	1	1	GD05222140	2.2KΩ	
RU07	1	1	GD05821140	820Ω	
RU08	1	1	GD05821140	820Ω	
RU09	1	1	GD05104140	100KΩ	
RU10	1	1	GD05472140	4.7KΩ	
RU11	1	1	GD05473140	47KΩ	
RU12	1	1	GD05683140	68KΩ	
RU13	1	1	GD05154140	150KΩ	
RU14	1	1	GD05273140	27KΩ	
RU15	1	1	GD05101140	100Ω	
RU16	1	1	GD05103140	10KΩ	
R601	1	1	GD05274140	270KΩ	
R602	1	1	GD05274140	270KΩ	
R603	1	1	GD05154140	150KΩ	
R604	1	1	GD05154140	150KΩ	
R605	1	1	GD05104140	100KΩ	
R606	1	1	GD05104140	100KΩ	
R607	1	1	GD05473140	47KΩ	
R608	1	1	GD05473140	47KΩ	
R609	1	1	GD05332140	3.3KΩ	
R610	1	1	GD05332140	3.3KΩ	
R611	1	1	GD05181140	180Ω	
R612	1	1	GD05181140	180Ω	
R613	1	1	GD05393140	39KΩ	
R651	1	1	GD05152140	1.5KΩ	
R652	1	1	GD05152140	1.5KΩ	
R653	1	1	GG05680140	68Ω	
R654	1	1	GG05680140	68Ω	
R801	1	1	GD05221140	220Ω	
R802	1	1	GD05221140	220Ω	
				PJ01-SEMICONDUCTORS	
DU07 ~ DU10	4	4	HD20001210	Diode	1S2473C
⚠D801	1	1	HD20022030	Diode	DSF10C
⚠D802	1	1	HD20022030	Diode	DSF10C
⚠D803	1	1	HD20022030	Diode	DSF10C
⚠D804	1	1	HD20022030	Diode	DSF10C
D805	1	1	HD20001210	Diode	1S2473C
D806	1	1	HD30022020	Zener	MA1130(M)
QJ03	1	1	HT317402F0	Transistor	2SC1740S(R, S)
QJ04	1	1	HT317402F0	Transistor	2SC1740S(R, S)
QJ05	1	1	HT317402F0	Transistor	2SC1740S(R, S)
QJ06	1	1	HT317402F0	Transistor	2SC1740S(R, S)
QJ51	1	1	HC10109050	IC	TA7405P

- (U): for U.S.A.
- (A): for Australia

REF. DESIG.	Q'TY		PART NO.	DESCRIPTION
	U	A		
QK01	1	1	HT317402F0	Transistor 2SC1740S(R, S)
QK02	1	1	HT317402F0	Transistor 2SC1740S(R, S)
QK03	1	1	HT317402F0	Transistor 2SC1740S(R, S)
QK04	1	1	HT317402F0	Transistor 2SC1740S(R, S)
QL01	1	1	HT317412B0	Transistor 2SC1741(Q, R)
QL02	1	1	HT317412B0	Transistor 2SC1741(Q, R)
QL03	1	1	HT317412B0	Transistor 2SC1741(Q, R)
QU01	1	1	HT317402F1	Transistor 2SC1740S(R, S)
QU02	1	1	HT317402F1	Transistor 2SC1740S(R, S)
QU03	1	1	HT317402F1	Transistor 2SC1740S(R, S)
QU04	1	1	HT317402F1	Transistor 2SC1740S(R, S)
QU51	1	1	HT109332B1	Transistor 2SA933S(R, S)
Q601	1	1	HC10058050	IC TA7629A
Q602	1	1	HC10058050	IC TA7629A
⚠Q801	1	1	HT403131E0	Transistor 2SD313(E)
				PJ01-MISCELLANEOUS
JJ01	1	1	YJ01002350	Jack, Mic (L)
JJ02	1	1	YJ01002350	Jack, Mic (R)
JJ51	1	1	YP06002420	Plug, 6P
JJ52	1	1	YP06002360	Plug, 3P
JJ53	1	1	YT02040470	Terminal, RCA Jack
JU01	1	1	YJ06002460	Jack, 7P
JU05	1	1	YJ06002390	Jack, 5P
JX01	1	1	YJ06002440	Jack, 4P
LK01	1	1	LC24750700	Choke Coil, 4.7mH
LK02	1	1	LC24750700	Choke Coil, 4.7mH
LK03	1	1	LC22260700	Choke Coil, 22mH
LK04	1	1	LC22260700	Choke Coil, 22mH
LL01	1	1	TC10150050	OSC Transformer, 105kHz
LL02	1	1	LC22250600	Choke Coil, 2.2mH
L601	1	1	LS10440010	M.P.X. Coil
L602	1	1	LS10440010	M.P.X. Coil
SJ51	1	1	SS06020600	Slide Switch, R/P
SJ52	1	1	SP02040300	Push Switch, Tape NR Select
WJ01	1	1	YU05140260	Jumper Lead, 5P
WU01	1	1	YU07160260	Jumper Lead, 7P
W801	1	1	YU04260260	Jumper Lead
				(SD242, ONLY) **PJ01-MAIN CIRCUIT BOARD**
PJ01	1	1	YK177T1510	P.W. Board, Main
	1	1	ZZ178T1510	P.W. Board Assembly
				PJ01-CAPACITORS
CJ01	1	1	EA10601610	Elect 10μF 16V
CJ02	1	1	EA10601610	Elect 10μF 16V
CJ03	1	1	DD15101370	Ceramic 100pF ±5%
CJ04	1	1	DD15101370	Ceramic 100pF ±5%
CJ05	1	1	EA10601610	Elect 10μF 16V
CJ06	1	1	EA10601610	Elect 10μF 16V
CJ21	1	1	DD15681370	Ceramic 680pF ±5%
CJ22	1	1	DD15681370	Ceramic 680pF ±5%
CJ23	1	1	EA33601610	Elect 33μF 16V
CJ24	1	1	EA33601610	Elect 33μF 16V

REF. DESIG.	Q'TY		PART NO.	DESCRIPTION
	U	A		
CJ25	1	1	DF15103350	Film 0.01μF ±5%
CJ26	1	1	DF15103350	Film 0.01μF ±5%
CJ27	1	1	EA10601610	Elect 10μF 16V
CJ28	1	1	EA10601610	Elect 10μF 16V
CJ29	1	1	EA10601610	Elect 10μF 16V
CJ30	1	1	EA10601610	Elect 10μF 16V
CJ31	1	1	EA47601610	Elect 47μF 16V
CJ32	1	1	EA47601610	Elect 47μF 16V
CJ33	1	1	DD15101370	Ceramic 100pF ±5%
CJ34	1	1	DD15101370	Ceramic 100pF ±5%
CJ35	1	1	EA22405010	Elect 0.22μF 50V
CJ36	1	1	EA22405010	Elect 0.22μF 50V
CJ37	1	1	EA10601610	Elect 10μF 16V
CJ51	1	1	EA47601610	Elect 47μF 16V
CJ52	1	1	EA10601610	Elect 10μF 16V
CJ53	1	1	EA10701610	Elect 100μF 16V
CJ54	1	1	EA47601610	Elect 47μF 16V
CK03	1	1	DF15272310	Film 2700pF ±5%
CK04	1	1	DF15272310	Film 2700pF ±5%
CK05	1	1	EA10601610	Elect 10μF 16V
CK06	1	1	EA10601610	Elect 10μF 16V
CK07	1	1	DF15682310	Film 6800pF ±5%
CK08	1	1	DF15682310	Film 6800pF ±5%
CK09	1	1	EA22505010	Elect 2.2μF 50V
CK10	1	1	EA22505010	Elect 2.2μF 50V
CK11	1	1	EA10601610	Elect 10μF 16V
CK12	1	1	EA10601610	Elect 10μF 16V
CK13	1	1	DF15683350	Film 0.068μF ±5%
CK14	1	1	DF15683350	Film 0.068μF ±5%
CK15	1	1	DF15563350	Film 0.056μF ±5%
CK16	1	1	DF15563350	Film 0.056μF ±5%
CK17	1	1	DF15183350	Film 0.018μF ±5%
CK18	1	1	DF15183350	Film 0.018μF ±5%
CK19	1	1	DF15821350	Film 820pF ±5%
CK20	1	1	DF15821350	Film 820pF ±5%
CK21	1	1	DD15101370	Ceramic 100pF ±5%
CK22	1	1	DD15101370	Ceramic 100pF ±5%
CL01	1	1	DF15221370	Film 220pF ±5%
CL02	1	1	DF15221370	Film 220pF ±5%
CL03	1	1	DF15562550	Film 5600pF ±5%
CL04	1	1	EA47601630	Elect 47μF 16V
CL05	1	1	DF15332310	Film 3300pF ±5%
CL06	1	1	DF15332310	Film 3300pF ±5%
CL07	1	1	DF15682310	Film 6800pF ±5%
CL08	1	1	EA10601630	Elect 10μF 16V
CL09	1	1	DF15103350	Film 0.01μF ±5%
CL10	1	1	DF15103350	Film 0.01μF ±5%
CL11	1	1	DF15103350	Film 0.01μF ±5%
CU01	1	1	EA10701010	Elect 100μF 10V
CU02	1	1	EA10701010	Elect 100μF 10V
CU11	1	1	DK18102300	Ceramic 1000pF
CU12	1	1	DK18102300	Ceramic 1000pF
C801	1	1	EA10802510	Elect 1000μF 25V
C802	1	1	EA47701610	Elect 470μF 16V
C803	1	1	EA10801610	Elect 1000μF 16V

- (U): for U.S.A.
- (A): for Australia

REF. DESIG.	Q'TY U	Q'TY A	PART NO.	DESCRIPTION
				PJ01-RESISTORS **(All Resistors are ±5% and ¼W)**
RJ01	1	1	GD05472140	4.7KΩ
RJ02	1	1	GD05472140	4.7KΩ
RJ03	1	1	GD05125140	1.2MΩ
RJ04	1	1	GD05125140	1.2MΩ
RJ05	1	1	GD05472140	4.7KΩ
RJ06	1	1	GD05472140	4.7KΩ
RJ07	1	1	GD05473140	47KΩ
RJ08	1	1	GD05473140	47KΩ
RJ09	1	1	GD05473140	47KΩ
RJ10	1	1	GD05473140	47KΩ
RJ11	1	1	GD05333140	33KΩ
RJ12	1	1	GD05333140	33KΩ
RJ13	1	1	GD05473140	47KΩ
RJ14	1	1	GD05473140	47KΩ
RJ15	1	1	RX05030230	50KΩ(A)
RJ17	1	1	GD05121140	120Ω
RJ21	1	1	GD05100140	10Ω
RJ22	1	1	GD05100140	10Ω
RJ23	1	1	GD05181140	180Ω
RJ24	1	1	GD05181140	180Ω
RJ25	1	1	GD05334140	330KΩ
RJ26	1	1	GD05334140	330KΩ
RJ27	1	1	GD05153140	15KΩ
RJ28	1	1	GD05153140	15KΩ
RJ29	1	1	GD05183140	18KΩ
RJ30	1	1	GD05183140	18KΩ
RJ31	1	1	RA04730600	47KΩ, Trimming
RJ32	1	1	RA04730600	47KΩ, Trimming
RJ33	1	1	GD05272140	2.7KΩ
RJ34	1	1	GD05272140	2.7KΩ
RJ35	1	1	GD05222140	2.2KΩ
RJ36	1	1	GD05222140	2.2KΩ
RJ37	1	1	GD05102140	1KΩ
RJ38	1	1	GD05102140	1KΩ
RJ39	1	1	GD05222140	2.2KΩ
RJ40	1	1	GD05222140	2.2KΩ
RJ41	1	1	GD05101140	100Ω
RJ42	1	1	GD05101140	100Ω
RJ43	1	1	GD05121140	120Ω
RJ44	1	1	GD05121140	120Ω
RJ45	1	1	GD05121140	120Ω
RJ46	1	1	GD05121140	120Ω
RJ47	1	1	GD05393140	39KΩ
RJ48	1	1	GD05393140	39KΩ
RJ49	1	1	GD05103140	10KΩ
RJ50	1	1	GD05103140	10KΩ
RJ52	1	1	GD05121140	120Ω
RJ53	1	1	GD05563140	56KΩ
RJ54	1	1	GD05471140	470Ω
RJ55	1	1	GD05333140	33KΩ
RJ61	1	1	GD05104140	100KΩ
RJ62	1	1	GD05104140	100KΩ
RK01	1	1	GD05223140	22KΩ
RK02	1	1	GD05223140	22KΩ
RK03	1	1	GD05103140	10KΩ
RK04	1	1	GD05103140	10KΩ
RK05	1	1	GD05103140	10KΩ
RK06	1	1	GD05103140	10KΩ
RK07	1	1	GD05123140	12KΩ
RK08	1	1	GD05123140	12KΩ
RK09	1	1	GD05104140	100KΩ
RK10	1	1	GD05104140	100KΩ
RK11	1	1	GD05474140	470KΩ
RK12	1	1	GD05474140	470KΩ
RK13	1	1	GD05562140	5.6KΩ
RK14	1	1	GD05562140	5.6KΩ
RK15	1	1	GD05122140	1.2KΩ
RK16	1	1	GD05122140	1.2KΩ
RK17	1	1	GD05104140	100KΩ
RK18	1	1	GD05104140	100KΩ
RK19	1	1	GD05332140	3.3KΩ
RK20	1	1	GD05332140	3.3KΩ
RK21	1	1	GD05122140	1.2KΩ
RK22	1	1	GD05122140	1.2KΩ
RK23	1	1	GD05822140	8.2KΩ
RK24	1	1	GD05822140	8.2KΩ
RK25	1	1	GD05222140	2.2KΩ
RK26	1	1	GD05222140	2.2KΩ
RK27	1	1	GD05121140	120Ω
RK28	1	1	GD05121140	120Ω
RK29	1	1	GD05223140	22KΩ
RK30	1	1	GD05223140	22KΩ
RK31	1	1	GD05822140	8.2KΩ
RK32	1	1	GD05822140	8.2KΩ
RK51	1	1	GD05152140	1.5KΩ
RL01	1	1	RA04730600	47KΩ, Trimming
RL02	1	1	RA04730600	47KΩ, Trimming
RL03	1	1	GD05153140	15KΩ
RL04	1	1	GD05153140	15KΩ
RL05	1	1	GD05033140	3.3Ω
RL06	1	1	GD05471140	470Ω
RL07	1	1	GD05271140	270Ω
RL08	1	1	RA04720600	47KΩ, Trimming
RL09	1	1	RA02220600	2.2KΩ
RL10	1	1	GG05033140	3.3Ω
RU01	1	1	GD05103140	10KΩ
RU02	1	1	GD05821140	820Ω
RU03	1	1	GD05103140	10KΩ
RU04	1	1	GD05821140	820Ω
RU05	1	1	GD05821140	820Ω
RU06	1	1	GD05222140	2.2KΩ
RU07	1	1	GD05821140	820Ω
RU08	1	1	GD05821140	820Ω
RU12	1	1	GD05683140	68KΩ
RU13	1	1	GD05154140	150KΩ
RU14	1	1	GD05273140	27KΩ
RU15	1	1	GD05101140	100Ω
RU16	1	1	GD05103140	10KΩ
R614	1	1	GD05471140	470Ω
R615	1	1	GD05821140	820Ω
R801	1	1	GD05221140	220Ω
R802	1	1	GD05221140	220Ω

- (U): for U.S.A.
- (A): for Australia

REF. DESIG.	Q'TY U	Q'TY A	PART NO.	DESCRIPTION
				PJ01-SEMICONDUCTORS
DU07	1	1	HD20001210	Diode 1S2473C
DU08	1	1	HD20001210	Diode 1S2473C
DU09	1	1	HD20001210	Diode 1S2473C
DU10	1	1	HD20001210	Diode 1S2473C
⚠D801	1	1	HD20022030	Diode DSF10C
⚠D802	1	1	HD20022030	Diode DSF10C
⚠D803	1	1	HD20022030	Diode DSF10C
⚠D804	1	1	HD20022030	Diode DSF10C
D805	1	1	HD20001210	Diode 1S2473C
D806	1	1	HD30022020	Zener MA1130(M)
QJ01	1	1	HT318451U0	Transistor 2SC1845(U)
QJ02	1	1	HT318451U0	Transistor 2SC1845(U)
QJ03	1	1	HT317402F0	Transistor 2SC1740S(R, S)
QJ04	1	1	HT317402F0	Transistor 2SC1740S(R, S)
QJ05	1	1	HT317402F0	Transistor 2SC1740S(R, S)
QJ06	1	1	HT317402F0	Transistor 2SC1740S(R, S)
QJ51	1	1	HC10109050	IC TA7405P
QK01	1	1	HT317402F0	Transistor 2SC1740S(R, S)
QK02	1	1	HT317402F0	Transistor 2SC1740S(R, S)
QK03	1	1	HT317402F0	Transistor 2SC1740S(R, S)
QK04	1	1	HT317402F0	Transistor 2SC1740S(R, S)
QL01	1	1	HT317412B0	Transistor 2SC1741(Q, R)
QL02	1	1	HT317412B0	Transistor 2SC1741(Q, R)
QL03	1	1	HT317412B0	Transistor 2SC1741(Q, R)
QU01	1	1	HT317402F1	Transistor 2SC1740S(R, S)
QU02	1	1	HT317402F1	Transistor 2SC1740S(R, S)
QU03	1	1	HT317402F1	Transistor 2SC1740S(R, S)
QU04	1	1	HT317402F1	Transistor 2SC1740S(R, S)
QU51	1	1	HT109332B1	Transistor 2SA933S(R, S)
⚠Q801	1	1	HT403131E0	Transistor 2SD313(E)
				PJ01-MISCELLANEOUS
JJ01	1	1	YJ01002350	Jack, Mic (L)
JJ02	1	1	YJ01002350	Jack, Mic (R)
JJ51	1	1	YP06002420	Plug, 6P
JJ52	1	1	YP06002360	Plug, 3P
JJ53	1	1	YT02040470	Terminal, RCA Jack
JU01	1	1	YJ06002460	Jack, 7P
JU05	1	1	YJ06002390	Jack, 5P
JX01	1	1	YJ06002440	Jack, 4P
J601	1	1	YJ06002390	Jack, 5P
J602	1	1	YJ06002460	Jack, 6P
LK01	1	1	LC24750700	Choke Coil, 4.7mH
LK02	1	1	LC24750700	Choke Coil, 4.7mH
LK03	1	1	LC22260700	Choke Coil, 22mH
LK04	1	1	LC22260700	Choke Coil, 22mH
LL01	1	1	TC10150050	OSC Transformer, 105kHz
LL02	1	1	LC22250600	Choke Coil, 2.2mH
SJ51	1	1	SS04020600	Slide Switch, R/P
SJ52	1	1	SP02040300	Push Switch, Tape NR Select
SJ53	1	1	SP02010632	Push Switch, Dolby B/C
WJ02	1	1	YU03260260	Jumper Lead, 3P
WU01	1	1	YU07160260	Jumper Lead, 7P
W801	1	1	YU04260260	Jumper Lead

REF. DESIG.	Q'TY U	Q'TY A	PART NO.	DESCRIPTION
				(SD142/SD242) PJ02-REC VOLUME CIRCUIT BOARD
PJ02	1	1	YK177T1530	P.W. Board, Rec Volume
	1	1	ZZ177T1530	P.W. Board Assembly
CU14	1	1	DK18102300	Ceramic 1000pF
RJ15	1	1	RX05030230	Variable Resistor 50KΩ(A)
RJ16	1	1	RX05030230	Variable Resistor 50KΩ(A)
WJ01	1	1	YU05090260	Jumper Lead, 5P
				(SD142/SD242) PJ03-HEADPHONE CIRCUIT BOARD
PJ03	1	1	YK177T1540	P.W. Board, Headphone
	1	1	ZZ177T1540	P.W. Board Assembly
JJ54	1	1	YJ01001790	Jack, Headphone
				(SD142, ONLY) PX01-LED METER CIRCUIT BOARD
PX01	1	1	YK177T1520	P.W. Board, LED Meter
	1	1	ZZ177T1520	P.W. Board Assembly
				PX01-CAPACITORS
CX01	1	1	EA47503510	Elect 4.7μF 35V
CX02	1	1	EA47503510	Elect 4.7μF 35V
CX51	1	1	EA47601610	Elect 47μF 16V
				PX01-RESISTORS
RX01	1	1	GD05103140	10KΩ ±5% ¼W
RX02	1	1	GD05103140	10KΩ ±5% ¼W
				PX01-SEMICONDUCTORS
DU01	1	1	HI10038320	L.E.D. GL-9PG24
DU02	1	1	HI10038320	L.E.D. GL-9PG24
DU03	1	1	HI10038320	L.E.D. GL-9PG24
DU04	1	1	HI10038320	L.E.D. GL-9PG24
DU05	1	1	HI10032320	L.E.D. GL-9PR24
DU14	1	1	HI10049030	L.E.D. SLP-456B
DX01	1	1	HI10044030	L.E.D. SLP-156B
DX02	1	1	HI10044030	L.E.D. SLP-156B
DX03	1	1	HI10044030	L.E.D. SLP-156B
DX04	1	1	HI10044030	L.E.D. SLP-156B
DX05	1	1	HI10045030	L.E.D. SLP-256B
DX06	1	1	HI10045030	L.E.D. SLP-256B
DX07	1	1	HI10045030	L.E.D. SLP-256B
DX08	1	1	HI10045030	L.E.D. SLP-256B
DX09	1	1	HI10045030	L.E.D. SLP-256B
DX10	1	1	HI10045030	L.E.D. SLP-256B
QX01	1	1	HC10006320	IC IR2E27A
				MISCELALNEOUS
WX01	1	1	YU04140260	Jumper Lead, 4P

• (U): for U.S.A.
• (A): for Australia

REF. DESIG.	Q'TY U	Q'TY A	PART NO.	DESCRIPTION
				(SD242, ONLY) **PX01-LED METER CIRCUIT BOARD**
PX01	1	1	YK177T1520	P.W. Board, LED Meter
	1	1	ZZ178T1520	P.W. Board Assembly
				PX01-CAPACITORS
CX01	1	1	EA47503510	Elect 4.7μF 35V
CX02	1	1	EA47503510	Elect 4.7μF 35V
CX51	1	1	EA47601610	Elect 47μF 16V
				PX01-RESISTORS
RX01	1	1	GD05103140	10KΩ ±5% ¼W
RX02	1	1	GD05103140	10KΩ ±5% ¼W
				PX01-SEMICONDUCTORS
DU01	1	1	HI10038320	L.E.D. GL-9PG24
DU02	1	1	HI10038320	L.E.D. GL-9PG24
DU03	1	1	HI10038320	L.E.D. GL-9PG24
DU04	1	1	HI10038320	L.E.D. GL-9PG24
DU05	1	1	HI10038320	L.E.D. GL-9PG24
DU06	1	1	HI10044030	L.E.D. SLP-156B
DU14	1	1	HI10049030	L.E.D. SLP-456B
DX01	1	1	HI10044030	L.E.D. SLP-156B
DX02	1	1	HI10044030	L.E.D. SLP-156B
DX03	1	1	HI10044030	L.E.D. SLP-156B
DX04	1	1	HI10044030	L.E.D. SLP-156B
DX05	1	1	HI10045030	L.E.D. SLP-256B
DX06	1	1	HI10045030	L.E.D. SLP-256B
DX07	1	1	HI10045030	L.E.D. SLP-256B
DX08	1	1	HI10045030	L.E.D. SLP-256B
DX09	1	1	HI10045030	L.E.D. SLP-256B
DX10	1	1	HI10045030	L.E.D. SLP-256B
QX01	1	1	HC10006320	IC IR2E27A
				MISCELALNEOUS
WX01	1	1	YU04140260	Jumper Lead, 4P
				(SD142/SD242) **P801-POWER SWITCH CIRCUIT BOARD**
P801	1	1	YK177T1550	P.W. Board, Power Switch
	1	1	ZZ177T1550	P.W. Board Assembly
⚠ S801	1	1	SP02011330	Push Switch, Power Standby
				(SD242, ONLY) **P600-DOLBY-B/C NR CIRCUIT BOARD**
P600	1	1	YK178T0210	P.W. Board, Dolby-B/C NR
	1	1	ZZ178T0210	P.W. Board, Assembly
				P600-CAPACITORS
C603	1	1	EA10601610	Elect 10μF 16V
C604	1	1	EA10601610	Elect 10μF 16V
C605	1	1	EA22601610	Elect 22μF 16V
C606	1	1	EA22601610	Elect 22μF 16V
C607	1	1	EA33405010	Elect 0.33μF 50V
C608	1	1	EA33405010	Elect 0.33μF 50V
C609	1	1	EA10505010	Elect 1μF 50V
C610	1	1	EA10505010	Elect 1μF 50V
C611	1	1	EA22701010	Elect 220μF 10V
C612	1	1	EA22701010	Elect 220μF 10V
C613	1	1	EA10601610	Elect 10μF 16V
C614	1	1	EA10601610	Elect 10μF 16V
C615	1	1	DF15333350	Film 0.033μF ±5%
C616	1	1	DF15334350	Film 0.033μF ±5%
C617	1	1	DF15822310	Film 8200pF ±5%
C618	1	1	DF15822310	Film 8200pF ±5%
C619	1	1	EA10601610	Elect 10μF 16V
C620	1	1	EA10601610	Elect 10μF 16V
C621	1	1	DF15103350	Film 0.01μF ±5%
C622	1	1	DF15103350	Film 0.01μF ±5%
C623	1	1	DF15182310	Film 1800pF ±5%
C624	1	1	DF15182310	Film 1800pF ±5%
C625	1	1	EA47405010	Elect 0.47μF 50V
C626	1	1	EA47405010	Elect 0.47μF 50V
C627	1	1	DF15183350	Film 0.018μF ±5%
C628	1	1	DF15183350	Film 0.018μF ±5%
C629	1	1	DF15154350	Film 0.15μF ±5%
C630	1	1	DF15154350	Film 0.15μF ±5%
C635	1	1	DF15154350	Film 0.15μF ±5%
C636	1	1	DF15154350	Film 0.15μF ±5%
C637	1	1	DF15823350	Film 0.082μF ±5%
C638	1	1	DF15823350	Film 0.082μF ±5%
C639	1	1	EA33405010	Elect 0.33μF 50V
C640	1	1	EA33405010	Elect 0.33μF 50V
C641	1	1	EA10601610	Elect 10μF 16V
C642	1	1	EA10601610	Elect 10μF 16V
C643	1	1	DF15392310	Film 3900pF ±5%
C644	1	1	DF15392310	Film 3900pF ±5%
C649	1	1	EA33405010	Elect 0.33μF 50V
C650	1	1	EA33405010	Elect 0.33μF 50V
C651	1	1	EA47405010	Elect 0.47μF 50V
C652	1	1	EA47405010	Elect 0.47μF 50V
C653	1	1	DF15562310	Film 5600pF ±5%
C654	1	1	DF15562310	Film 5600pF ±5%
C655	1	1	DD15390370	Ceramic 39pF ±5%
C656	1	1	DD15390370	Ceramic 39pF ±5%
C657	1	1	EA10601610	Elect 10μF 16V
C658	1	1	EA10601610	Elect 10μF 16V
C659	1	1	DD15271370	Ceramic 270pF ±5%
C660	1	1	DD15271370	Ceramic 270pF ±5%
C661	1	1	EA47405010	Elect 4.7μF 50V
C662	1	1	EA47405010	Elect 4.7μF 50V
C663	1	1	DD15151370	Ceramic 150pF ±5%
C664	1	1	DD15151370	Ceramic 150pF ±5%
C667	1	1	DF15222310	Film 2200pF ±5%
C668	1	1	DF15222310	Film 2200pF ±5%
C669	1	1	EA47701610	Elect 470μF 16V
C670	1	1	EA47701610	Elect 470μF 16V

- (U): for U.S.A.
- (A): for Australia

REF. DESIG.	Q'TY U	Q'TY A	PART NO.	DESCRIPTION
				P600-RESISTORS
				(All Resistors are ±5% and ¼W)
R601	1	1	GD05562140	5.6KΩ
R602	1	1	GD05562140	5.6KΩ
R605	1	1	GD05822140	8.2KΩ
R606	1	1	GD05822140	8.2KΩ
R607	1	1	GD05332140	3.3KΩ
R608	1	1	GD05332140	3.3KΩ
R615	1	1	GD05273140	27KΩ
R616	1	1	GD05273140	27KΩ
R617	1	1	GD05332140	3.3KΩ
R618	1	1	GD05332140	3.3KΩ
R619	1	1	GD05102140	1KΩ
R620	1	1	GD05102140	1KΩ
R621	1	1	GD05823140	82KΩ
R622	1	1	GD05823140	82KΩ
R623	1	1	GD05562140	5.6KΩ
R624	1	1	GD05562140	5.6KΩ
R625	1	1	GD05562140	5.6KΩ
R626	1	1	GD05562140	5.6KΩ
R627	1	1	GD05473140	47KΩ
R628	1	1	GD05473140	47KΩ
R629	1	1	GD05823140	82KΩ
R630	1	1	GD05823140	82KΩ
R631	1	1	GD05822140	8.2KΩ
R632	1	1	GD05822140	8.2KΩ
R633	1	1	GD05221140	220Ω
R634	1	1	GD05221140	220Ω
R637	1	1	GD05472140	4.7KΩ
R638	1	1	GD05472140	4.7KΩ
R639	1	1	GD05225140	2.2MΩ
R640	1	1	GD05225140	2.2MΩ
R641	1	1	GD05683140	68KΩ
R642	1	1	GD05683140	68KΩ
R643	1	1	GD05103140	10KΩ
R644	1	1	GD05103140	10KΩ
R661	1	1	GD05105140	1MΩ
R662	1	1	GD05105140	1MΩ
R665	1	1	GD05562140	5.6KΩ
R666	1	1	GD05562140	5.6KΩ
R667	1	1	GD05332140	3.3KΩ
R668	1	1	GD05332140	3.3KΩ
R681	1	1	GD05103140	10KΩ
R682	1	1	GD05822140	8.2KΩ
R685	1	1	GD05333140	33KΩ
R686	1	1	GD05333140	33KΩ
R691	1	1	GG05100140	10Ω

REF. DESIG.	Q'TY U	Q'TY A	PART NO.	DESCRIPTION	
				P600-SEMICONDUCTORS	
Q601	1	1	HC10065010	IC	HA12058NT
Q602	1	1	HC10065010	IC	HA12058NT
Q603	1	1	HT323622B0	Transistor	2SC2362(G, H)
Q604	1	1	HT323622B0	Transistor	2SC2362(G, H)
				P600-MISCELLANEOUS	
L601	1	1	LS10440010	M.P.X. Coil, 19kHz	
L602	1	1	LS10440010	M.P.X. Coil, 19kHz	
L603	1	1	LC23660700	Choke Coil, 36mH	
L604	1	1	LC23660700	Choke Coil, 36mH	
W601	1	1	YU05140260	Jumper Lead, 5P	
W602	1	1	YU07140260	Jumper Lead, 7P	

(W01-99)	**Assembly and Wiring**
(T01-99)	**Adjustment**
(X01-00)	**Correction**

NOTE ON SAFETY:

Symbol ⚠ Fire or electrical shock hazard. Only original parts should be used to replace any part marked with symbol ⚠ . Any other component substitution (other than original type), may increase risk of fire or electrical shock hazard.

10. TECHNICAL SPECIFICATIONS

Model SD142

Style	Front load
Tape Drive System	Single Capstan Drive
Cartridge	Philips type compact cassette
Track System	Compatible Stereo 4-track 2-channel
Tape Speed	4.75 cm/sec.
Heads	2 Head System
Composition	Rec/Play: Super Hard Metal Alloy Erase: Dual gap Ferrite
Motor	1 Motor System Capstan: DC Servo Motor
Wow & Flutter (WRMS)	
Standard Speed (1-7/8 ips)	0.08%
Frequency Response	
(Overall; −20 dB below 0 VU) ±3 dB	
Metal	40 Hz to 15 kHz
CrO_2	40 Hz to 14 kHz
Normal	40 Hz to 12 kHz
Signal to Noise Ratio	
Dolby On	59 dB
Dolby Off	51 dB
Outputs	
Line Level/Impedance	400 mV/5k ohms
Headphone Level/Impedance	35 mV/8 ohms
Input	
Line Sensitivity/Impedance	70 mV/50k ohms
Microphone Level/Impedance	0.3 mV/10k ohms
Power Requirements	120V AC, 60 Hz
Dimensions	
Panel Width	16-1/2 inches (420 mm)
Panel Height	4-3/8 inches (110 mm)
Depth	7-7/8 inches (200 mm)
Weight	7.5 lbs (3.4 kg)

Specifications and appearance are subject to change for modification without notice.

Note on safety: Symbol ⚠ Fire or electrical shock hazard. Only original parts should be used to replace any part marked with symbol ⚠. Any other component substitution (other than original type), may increase risk of fire or electrical shock hazard.

Model SD242

Style	Front load
Tape Drive System	Single Capstan Drive
Cartridge	Philips type compact cassette
Track System	Compatible Stereo 4-track 2-channel
Tape Speed	4.75 cm/sec.
Heads	2 Head System
Composition	Rec/Play: Super Hard Metal Alloy Erase: Dual gap Ferrite
Motor	1 Motor System Capstan: DC Servo Motor
Wow & Flutter (WRMS)	
Standard Speed (1-7/8 ips)	0.05%
Frequency Response	
(Overall; −20 dB below 0 VU) ±3 dB	
Metal	40 Hz to 16 kHz
CrO_2	40 Hz to 15 kHz
Normal	40 Hz to 13 kHz
Signal to Noise Ratio	
Dolby On	Dolby B – 60 dB Dolby C – 66 dB
Dolby Off	52 dB
Outputs	
Line Level/Impedance	400 mV/5k ohms
Headphone Level/Impedance	35 mV/8 ohms
Input	
Line Sensitivity/Impedance	70 mV/50k ohms
Microphone Level/Impedance	0.3 mV/10k ohms
Power Requirements	120V AC, 60 Hz
Dimensions	
Panel Width	16-1/2 inches (420 mm)
Panel Height	4-3/8 inches (110 mm)
Depth	7-7/8 inches (200 mm)
Weight	7.5 lbs (3.4 kg)

Specifications and appearance are subject to change for modification without notice.

11. SCHEMATIC DIAGRAM

Model SD142

PJ01
PJ02
PJ03
PX01
P801
MIC Lch JJ01
MIC Rch JJ02
QJ01
QJ02
RJ05 3.3k
RJ06 3.3k
CJ01 10/16V
CJ02 10/16V
RJ01 4.7k
RJ02 4.7k
RJ03 1M
RJ04 1M
CJ03 100p
CJ04 100p
CJ05 10/16V
CJ06 10/16V
RJ07 47k
RJ08 47k
RJ09 47k
RJ10 47k
CU11 0.001
RJ11 33k
RJ12 33k
RJ13 47k
RJ14 47k
CJ51 47/16V
Lch
Rch
CU12 0.001
LINE IN JJ53 1/2
REC VOL.
CU14 0.001
RJ15 50k(A)
RJ16 50k(A)
WJ01
JU05
SJ51-5
C601 0.47/50V
C602 0.47/50V
C619 470/16V
R653 68
C621 10/16V
Q601
R605 100k
C603 10/16V
C611 220/10V
MPX
L601
C623 0.0027
C605 0.047
C607 0.33
C609 0.1
R601 270k
R603 150k
R607 47k
C613 0.0047
R609 3.3k
C617 0.027
C615 0.0056
R611 180
C625 0.47/50V
TP7
TP5
C627 10/16V
CK01 10/16V
R651 1.5k
R652 1.5k
SJ51-2
RJ49 100k
RJ50 100k
RJ33 2.7k
RJ37 1k
CJ29 10/16V
QJ03
QJ04
QJ05
QJ06
RJ35 2.2k
RJ36 2.2k
RJ39 2.2k
LINE OUT Lch
LINE OUT Rch JJ53 1/2
RJ47 39k
RJ40 2.2k
RJ34 2.7k
RJ38 1k
CJ30 10/16V
RJ48 39k
CJ35 0.22
CJ36 0.22
RJ61 100k
RJ62 100k
CJ33 100p
CJ34 100p
CJ37 10/16V
CJ31 47/16V
CJ32 47/16V
RJ41 100
RJ42 100
RJ43 120
RJ44 120
RJ45 120
RJ46 120
RJ51 120
RJ52 120
12V
6V
5.4V
WJ02
HEADPHONES JACK
JJ54
CU13 0.001
CK21 100p
LK03 22mH
CK19 820p
RK31 8.2k
RJ17 470
RJ54 470
CK09 2.2/50V
RK13 5.6k
RK51 1.5k
RK11 47k
QK01
QK02
QK03
QK04
CK05 10/16V
CK03 0.0033
RK03 10k
RK01 22k
LK01 4.7mH
CK15 0.056
RK25 2.2k
RK23 8.2k
CK13 0.068
RK21 1.2k
RK19 3.3k
RK29 22k
RK27 120
CK17 0.018
RL08 10k
RL09 820
CK11 10/16V
RK17 100k
RK15 1.2k
CK51 47/16V
RK09 10k
RK07 10k
CK07 0.0068
RK05 10k
RK33 22k
NORMAL
SJ52-1
RL07 270
RK30 22k
RK28 120
CK18 0.018
Cr02 SJ52-2
METAL SJ52-3
RK26 2.2k
RK24 8.2k
RK22 1.2k
RK20 3.3k
CK16 0.056
CK14 0.068
LK02 4.7mH
RK18 100k
RK16 1.2k
CK12 10/16V
RK10 10k
RK08 10k
CK08 0.0068
RK06 10k
RK34 22k
RK04 10k
RK02 22k
CK06 10/16V
CK04 0.0033
RK12 47k
RK14 5.6k
CK10 2.2/50V
TP1
TP2
TP3
TP4
REC/PLAY HEAD H071
JH71
JJ51
RJ21 10
RJ22 10
SJ51-3
SJ51-4
CJ21 680p
CJ22 680p
CJ53 100/16V
QJ51
CJ23 47/16V
RJ23 180
CJ54 47/16V
RJ25 330k
RJ27 15k
RJ29 18k
CJ25 0.01
CJ27 10/16V
RJ31 47k
RJ57 47k
RJ58 47k
CJ52 10/16V
RJ53 56k
CJ26 0.01
RJ30 18k
RJ28 15k
RJ26 330k
CJ28 10/16V
RJ32 47k
RJ55 33k
CJ24 47/16V
RJ24 180
TP8
Q602
C624 0.0027
L602
C612 220/10V
C606 0.047
C608 0.33
C610 0.1
C618 0.027
R608 47k
C614 0.0047
C616 0.0056
R612 180
R610 3.3k
R606 100k
C604 10/16V
R602 270k
R604 150k
CK02 10/16V
C628 10/16V
TP6
C620 470/16V
C622 10/16V
R654 68
LK04 22mH
RK32 8.2k
CK22 100p
CK20 100p
BIAS
RL01 47k
RL02 47k
CL01 220p
CL02 220p
QL01
QL02
QL03
LL02 2.2mH
RL06 470
CL08 10/16V
CL10 0.01
CL09 0.01
LL01
CL05 0.0033
RL03 15k
CL11 0.01
CL07 0.0068
RL04 15k
CL06 0.0033
CL03 0.0056
CL04 47/16V
RL10 3.3
RL05 3.3
ERASE HEAD H072
JH72
JJ52
QU01
QU02
QU03
QU04
QU51
RU01 10k
RU02 820
RU03 10k
RU04 820
R613 39k
SJ52-4 DOLBY SW.
ON
OFF
RU08 820
WU01
JU01
RU06 2.2k
RU07 820
RU05 820
DU14 PAUSE
DU05 REC
DU04 DOLBY
DU03 NORMAL
DU02 Cr02
DU01 METAL
JX01
WX01
RX02 10k
RX01 10k
QX01
CX02 4.7/35V
CX01 4.7/35V
DX01
DX02
DX03
DX04
DX05
DX06
DX07
DX08
DX09
DX10
CX51 47/16V
DU07
DU08
RU16 10k
RU15 100
RU13 150k
RU12 68k
RU09 100k
RU10 4.7k
RU11 47k
DU09
DU10
CU01 100/10V
RU14 27k
CU02 100/10V
SJ51-1
Q801 ⚠
R801 220
D805
R802 220
C802 470/16V
D806
C801 1000 25V
C803 47/16V
D801 ~ D804 ⚠
J802
J801
L001
(U) VERSION
AC120V 60Hz ⚠W001 AC CORD
AC240V 50Hz J091 ⚠ AC INLET
(A) VERSION
JU51
JH73
W801
S072 PAUSE ON
S071 PLAY ON
M071
⚠ S801 POWER SW.
BOTTOM VIEW
TA7405P QJ51
TOP VIEW
TA7629A Q601, Q602
IR2E27A QX01
2SD313(E) Q801
2SC1845(U) QJ01, QJ02
2SC1741(Q.R) QL01 ~ QL03
2SC1740S(R.S) QJ03 ~ QJ06 QK01 ~ QK04 QU01 ~ QU04
2SA933 (R.S) QU51
B
C
E

DU01 ~ DU04 HI10038320 GL-9PG24 (GRN)	QJ01, QJ02 HT318451U0 2SC1845(U)
DU05 HI 10032320 GL-9PR24	QJ03 ~ QJ06, QK01 ~ QK04 QU01 ~ QU04 HT317402F0 2SC1740S (R.S)
DU14 HI10049030 SLP-456B (ORG)	QJ51 HC10109050 TA7405P
DU07 ~ DU10, D805 HD20001210 1S2473	QL01 ~ QL03 HT3174128O 2SC1741 (Q.R)
DX01 ~ DX04 HI10044030 SLP-156B (RED)	QU51 HT109332B0 2SA933 (R.S)
DX05 ~ DX10 HI10045030 SLP-256B (GRN)	QX01 HC10006320 IR2E27A
D801 ~ D804 HD20022030 DSF10C	Q601, Q602 HC10058050 TA7629A
D806 HD30022020 MA1130 (M)	Q801 HT403131E0 2SD313 (E)

NOTE ON SAFETY :

Symbol ⚠ Fire or electrical shock hazard. Only original parts should be used to replace any part marked with symbol ⚠. Any other component substitution (other than original type), may increase risk of fire or electrical shock hazard.

Components and wiring are subject to change for modification without notice.

Model SD242

To P600 (W601)
To P600 (W602)
PJ01
PJ02
PJ03
J601
J602
MIC Lch JJ01
MIC Rch JJ02
QJ01
QJ02
RJ05 4.7k
CJ01 10/16V
RJ01 4.7k
RJ03 1.2M
CJ05 10/16V
RJ07 47k
RJ09 47k
CJ03 100p
RJ11 22k
RJ12 22k
RJ13 100k
RJ14 100k
CU11 0.001
RJ10 47k
CJ02 10/16V
RJ02 4.7k
RJ04 1.2M
CJ04 100p
RJ08 47k
RJ06 4.7k
CJ06 10/16V
CJ51 47/16V
Lch
Rch
CU12 0.001
LINE IN JJ53 1/2
CU14 0.001
REC VOL.
Lch
Rch
RJ15 50k(A)
RJ16 50k(A)
WJ01
JU05
R691 10
RJ17 470
RJ54 470
CK21 100p
LK03 22mH
CK19 820p
RK31 8.2k
CJ23 33/16V
RJ23 180
CJ54 47/16V
RJ25 330k
CJ27 10/16V
RJ27 15k
RJ29 18k
RJ31 47k
CJ25 0.01
RJ57 47k
RJ58 47k
CJ52 10/16V
RJ53 56k
CJ26 0.01
RJ30 18k
RJ28 15k
RJ32 47k
RJ26 330k
CJ28 10/16V
RJ55 33k
CJ24 33/16V
RJ24 180
QJ51
TP1
TP2
TP3
TP4
REC/PLAY HEAD H071
RJ21 10
RJ22 10
SJ51-3
SJ51-4
CJ21 680p
CJ22 680p
CJ53 100/16V
JH71
JJ51
LK04 22mH
CK22 100p
RK32 8.2k
CK20 820p
RL01 47k
RL02 47k
CL01 220p
CL02 220p
ERASE HEAD H072
JH72
JJ52
LL01
CL03 0.0056
CL04 47/16V
CL05 0.0033
RL03 15k
CL11 0.01
CL07 0.0068
RL04 15k
CL06 0.0033
QL02
QL03
RL10 3.3
RL05 3.3
QL01
LL02 2.2mH
RL06 470
CL08 10/16V
CL10 0.01
CL09 0.01
RU04 820
RU03 10k
RU02 820
RU01 10k
QU02
QU01
SJ51-2
CK09 2.2/50V
RK13 5.6k
RK51 1.5k
RK11 47k
CK05 10/16V
CK03 0.0027
RK01 22k
RK03 10k
LK01 4.7mH
CK15 0.056
RK25 2.2k
RK23 8.2k
CK13 0.068
RK21 1.2k
RK19 3.3k
RK29 22k
RK27 120
CK17 0.018
RL08 4.7k (METAL)
RL09 2.2k (Cr02)
CK11 10/16V
QK03
RK17 100k
RK15 1.2k
CK51 47/16V
RK09 10k
CK07 0.0056
RK07 18k
QK01
RK05 10k
RK33 22k
NORMAL
SJ52-1
RL07 270
RK30 22k
RK28 120
CK18 0.018
LK02 4.7mH
Cr02 SJ52-2
METAL SJ52-3
RK26 2.2k
CK16 0.056
RK24 8.2k
RK22 1.2k
CK14 0.068
RK20 3.3k
RK18 100k
RK16 1.2k
CK12 10/16V
QK04
RK10 10k
RK08 18k
CK08 0.0051
QK02
RK06 10k
RK34 22k
RK04 10k
RK02 22k
CK06 10/16V
CK04 0.0027
RK12 47k
RK14 5.6k
CK10 2.2/50V
DOLBY C
B
SJ53
DOLBY SW.
DOLBY ON
OFF
SJ52-4
R615 560
R614 820
RJ33 2.7k
RJ37 1k
CJ29 10/16V
RJ61 100k
QJ05
CJ37 10/16V
QJ03
RJ35 2.2k
RJ49 10k
RJ39 2.2k
LINE OUT Lch
CJ33 100p
CJ31 47/16V
RJ41 100
RJ45 120
RJ43 120
RJ51 120
RJ52 120
RJ47 39k
QJ04
RJ36 2.2k
RJ50 10k
Rch
LINE OUT
RJ46 120
RJ44 120
CJ34 100p
CJ32 47/16V
RJ42 100
RJ40 2.2k
RJ34 2.7k
RJ38 1k
CJ30 10/16V
QJ06
CJ35 0.22
CJ36 0.22
RJ48 39k
RJ62 100k
WJ02
HEADPHONES JACK
JJ54
CU13 0.001
DU07
DU08
QU51
RU16 10k
RU15 100
QU04
RU13 150k
RU12 100k
QU03
RU09 100k
DU09
DU10
CU01 100/10V
RU14 27k
CU02 100/10V
RU11 47k
RU10 4.7k
SJ51-1
Q801
12.6V
R801 220
D805
R802 220
C803 1000/16V
C802 470/16V
D806
C801 1000 25V
D801~D804
J802
J801
L001
(U) VERSION
AC120V 60Hz W001
AC CORD
AC 240V 50Hz J091
AC INLET
(A) VERSION
JX01
WX01
JU51
JH73
W801
S072
PAUSE ON
S071
PLAY ON
M071
S801
POWER SW.
ON
OFF
P801
JU01
WU01
RU08 820
RU06 2.2k
RU22 820
RU07 820
RU05 820
DU14 PAUSE
DU06 REC
DU05 DOLBY C
DU04 DOLBY B
DU03 NORMAL
DU02 Cr02
DU01 METAL
RX02 10k
RX01 10k
CX02 4.7/35V
CX01 4.7/35V
QX01
DX01
DX02
DX03
DX04
DX05
DX06
DX07
DX08
DX09
DX10
CX51 47/16V
PX01
DU01 ~ DU05
HI10038320
GL-9PG24 (GRN)
QJ01, QJ02
HT318451U0
2SC1845(U)
D806
HD30022020
MA1130
QJ03~QJ06, QK01~QK04
QU01~QU04
HT317402F0
2SC1740S(R.S)
DU14
HI10049030
SLP-456B (ORG)
QJ51
HC10109050
TA7405P
DU07 ~ DU10
D805
HD20001210
1S2473C
QL01 ~ QL03
HT317412B0
2SC1741(Q.R)
DX01 ~ DX04
DU06
HI10044030
SLP-156B (RED)
QU51
HT109332B0
2SA933S(R.S)
DX05 ~ DX10
HI10045030
SLP-256B (GRN)
QX01
HC10006320
IR2E27A
D801 ~ D804
HD20022030
DSF10C
Q801
HT403131E0
2SD313(E)
BOTTOM VIEW
TA7405P
QJ51
TOP VIEW
IR2E27A
QX01
2SD313(E)
Q801
2SC1845(U)
QJ01, QJ02
2SC1741(Q.R)
QL01 ~ QL03
2SC1740S(R.S)
QJ03 ~ QJ06
QK01 ~ QK04
QU01 ~ QU04
2SA933S(R.S)
QU51

NOTE ON SAFETY :

Symbol ⚠ Fire or electrical shock hazard. Only original parts should be used to replace any part marked with symbol ⚠. Any other component substitution (other than original type), may increase risk of fire or electrical shock hazard.

Components and wiring are subject to change for modification without notice.

Dolby NR/B-C

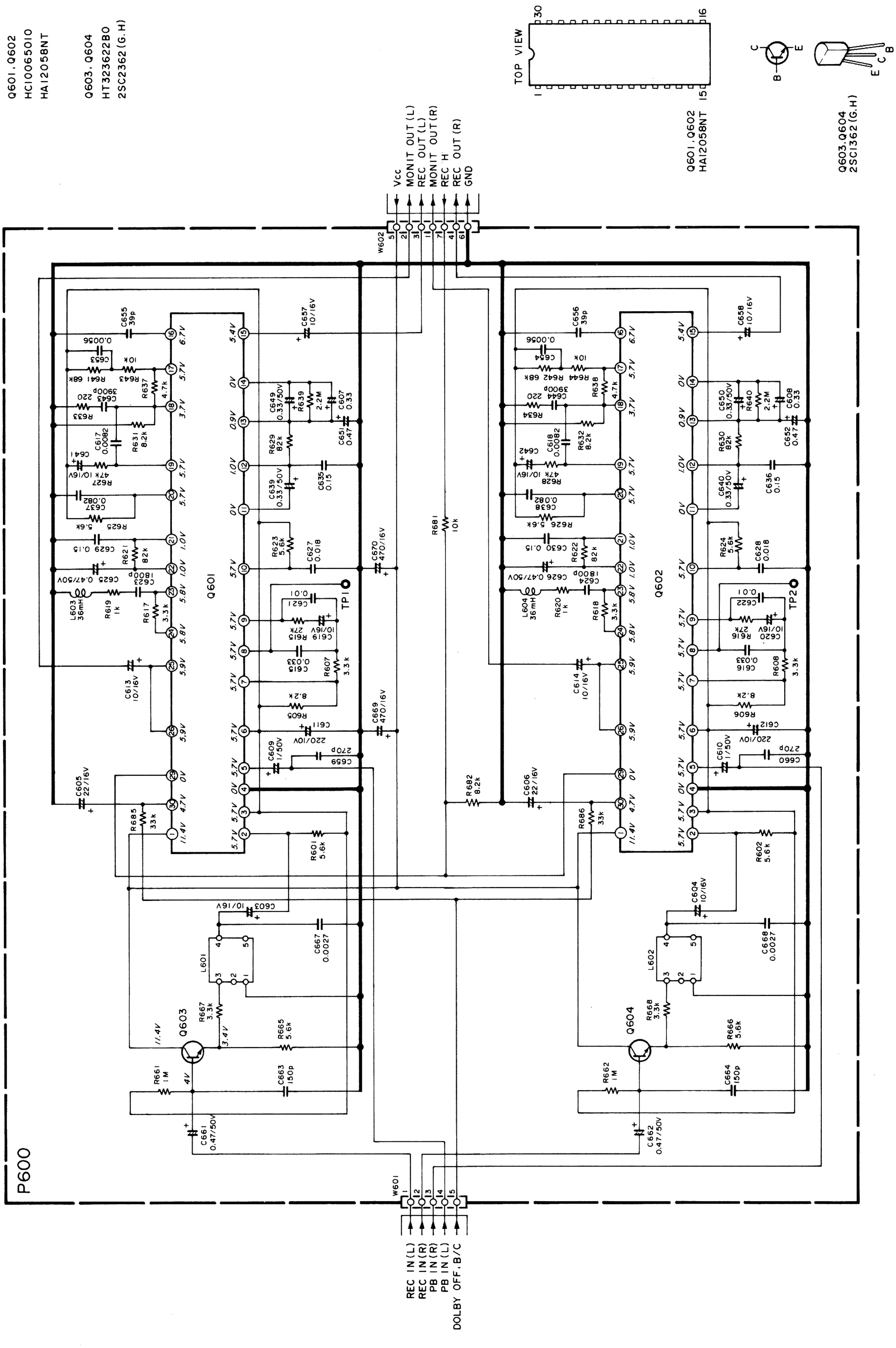
Q601, Q602
HC10065010
HA12058NT
Q603, Q604
HT323622B0
2SC2362(G.H)
TOP VIEW
30
16
1
15
Q601, Q602
HA12058NT
C
E
B
E
C
B
Q603, Q604
2SC1362(G.H)
Vcc
MONIT OUT (L)
REC OUT (L)
MONIT OUT (R)
REC H
REC OUT (R)
GND
W602
5
2
3
1
7
4
6
P600
Q601
Q602
TP1
TP2
C655 39p
C656 39p
C657 10/16V
C658 10/16V
C653 0.0056
C654 0.0056
R641 68K
R642 68K
R643 10K
R644 10K
R637 4.7k
R638 4.7k
C643 3900p
C644 3900p
R633 220
R634 220
R631 8.2k
R632 8.2k
C617 0.0082
C618 0.0082
C641 10/16V
C642 10/16V
R627 47K
R628 47K
C637 0.082
C638 0.082
R625 5.6K
R626 5.6K
C629 0.15
C630 0.15
R621 82k
R622 82k
C625 0.47/50V
C626 0.47/50V
C623 1800p
C624 1800p
L603 36mH
L604 36mH
R619 1k
R620 1k
R617 3.3k
R618 3.3k
C613 10/16V
C614 10/16V
C605 22/16V
C606 22/16V
R685 33k
R686 33k
C649 0.33/50V
C650 0.33/50V
R639 2.2M
R640 2.2M
C607 0.33
C608 0.33
C651 0.47
C652 0.47
R629 82k
R630 82k
C639 0.33/50V
C640 0.33/50V
C635 0.15
C636 0.15
R623 5.6k
R624 5.6k
C627 0.018
C628 0.018
C621 0.01
C622 0.01
R615 27K
R616 27K
C619 10/16V
C620 10/16V
C615 0.033
C616 0.033
R607 3.3k
R608 3.3k
R605 8.2K
R606 8.2K
C611 220/10V
C612 220/10V
C609 1/50V
C610 1/50V
C659 270p
C660 270p
C670 470/16V
C669 470/16V
R681 10k
R682 8.2k
R601 5.6k
R602 5.6k
C603 10/16V
C604 10/16V
C667 0.0027
C668 0.0027
L601
L602
Q603
Q604
R667 3.3k
R668 3.3k
R665 5.6k
R666 5.6k
R661 1M
R662 1M
C663 150p
C664 150p
C661 0.47/50V
C662 0.47/50V
11.4V
3.4V
4V
6.7V
5.7V
3.7V
5.7V
5.7V
1.0V
1.0V
5.8V
5.8V
5.9V
5.9V
0V
4.7V
11.4V
5.4V
0V
0.9V
1.0V
0V
5.7V
5.7V
5.7V
5.7V
5.7V
5.7V
0V
5.7V
5.7V
W601
1
2
3
4
5
REC IN (L)
REC IN (R)
PB IN (R)
PB IN (L)
DOLBY OFF. B/C

marantz®

Printed in Japan

177T855010 ⓈⒼ
1984/7